DATA SHEET

Three Phase Induction Motor - Squirrel Cage

Customer :

Product line : W21 In Line Extra Thrust NEMA Premium Efficiency Three-Phase

Product code : 19092277

Frame	: 215LP
Output	: 7.5 HP (5.5 kW)
Poles	: 2
Frequency	: 60 Hz
Rated voltage	: 575 V
Rated current	: 6.86 A
L. R. Amperes	: 48.0 A
LRC	: 7.0x(Code H)
No load current	: 1.83 A
Rated speed	: 3535 rpm
Slip	: 1.81 %
Rated torque	: 1.54 kgfm
Locked rotor torque	: 220 %
Breakdown torque	: 300 %
Insulation class	: F
Service factor	: 1.25
Moment of inertia (J)	: 0.0200 kgm²
Design	: B

Locked rotor time	: 41s (cold) 23s (hot)
Temperature rise	: 80 K
Duty cycle	: Cont.(S1)
Ambient temperature	: -20°C to +40°C
Altitude	: 1000 m.a.s.l.
Protection degree	: IP55
Cooling method	: IC411 - TEFC
Mounting	: W-6
Rotation[1]	: Both (CW and CCW)
Noise level[2]	: 72.0 dB(A)
Starting method	: Direct On Line
Approx. weight[3]	: 109 kg

Output	25%	50%	75%	100%
Efficiency (%)	0.000	85.5	88.5	89.5
Power Factor	0.00	0.78	0.87	0.90

Foundation loads

Max. traction : 0 kgf

Max. compression : 0 kgf

Losses at normative operating points (speed;torque), in percentage of rated output power

P1 (0,9;1,0)	P2 (0,5;1,0)	P3 (0,25;1,0)	P4 (0,9;0,5)	P5 (0,5;0,5)	P6 (0,5;0,25)	P7 (0,25;0,25)
11.0	8.2	7.4	5.8	3.2	2.1	1.2

		Drive end	Non drive end
Bearing type	:	6309	7306BECB
Sealing	:	Oil Seal	Lip Seal
Lubrication interval	:	7898 h	8437 h
Lubricant amount	:	13 g	7 g
Lubricant type	:	Mobil Polyrex EM	

Notes
In Line Extra Thrust Motor
NEMA Premium Efficiency

This revision replaces and cancel the previous one, which must be eliminated.
(1) Looking the motor from the shaft end.
(2) Measured at 1m and with tolerance of +3dB(A).
(3) Approximate weight subject to changes after manufacturing process.
(4) At 100% of full load.

These are average values based on tests with sinusoidal power supply, subject to the tolerances stipulated in NEMA MG-1.

Rev.	Changes Summary	Performed	Checked	Date

Performed by				
Checked by			Page	Revision
Date	20/07/2026		1 / 2	

This document is exclusive property of WEG S/A. Reprinting is not allowed without written authorization of WEG S/A.
Subject to change without notice

LOAD PERFORMANCE CURVE

Three Phase Induction Motor - Squirrel Cage

Customer	:

Product line	: W21 In Line Extra Thrust NEMA Premium Efficiency Three-Phase	Product code :	19092277

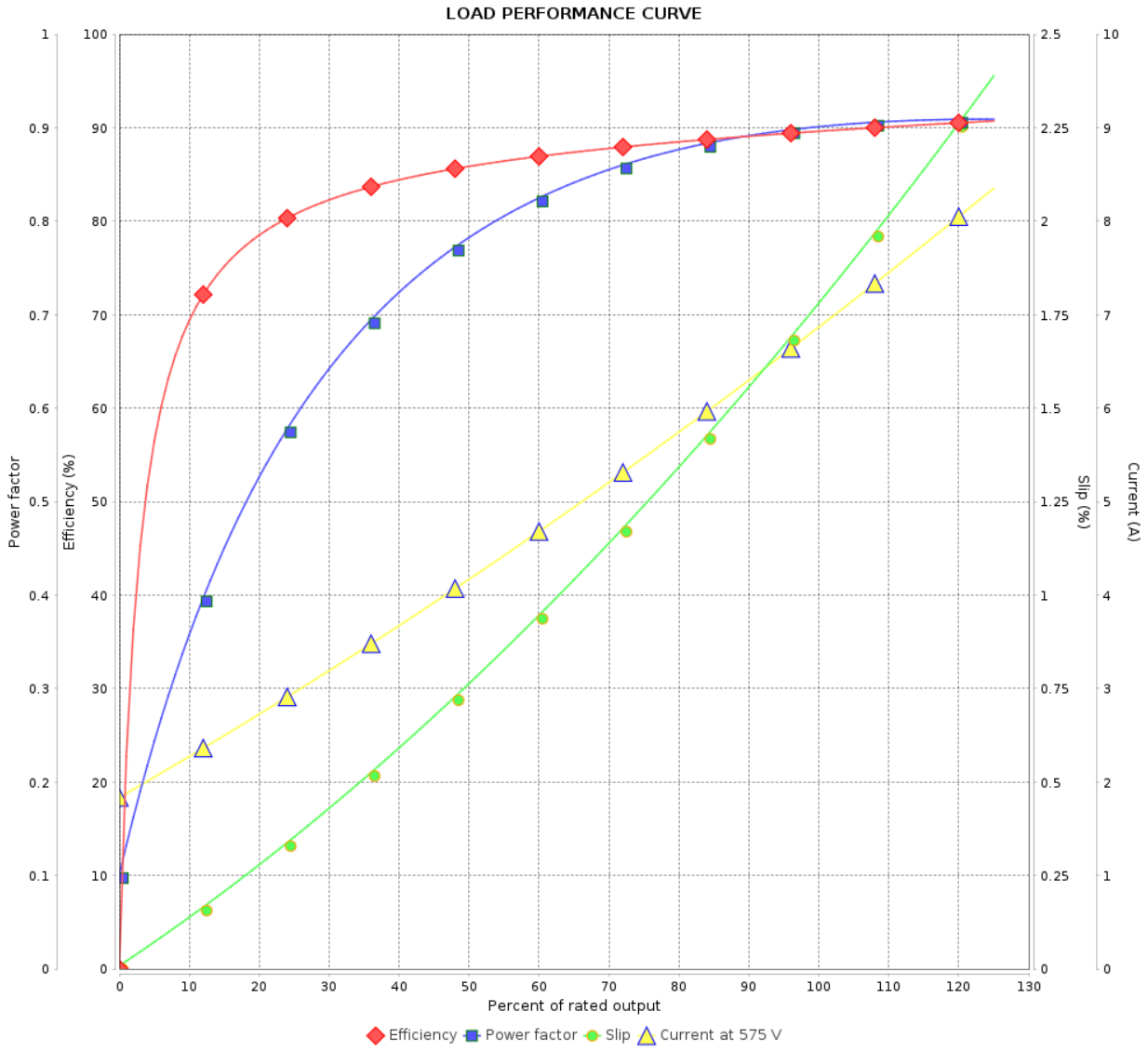

Performance	: 575 V 60 Hz 2P

Rated current	: 6.86 A	Moment of inertia (J)	: 0.0200 kgm²
LRC	: 7.0	Duty cycle	: Cont.(S1)
Rated torque	: 1.54 kgfm	Insulation class	: F
Locked rotor torque	: 220 %	Service factor	: 1.25
Breakdown torque	: 300 %	Temperature rise	: 80 K
Rated speed	: 3535 rpm	Design	: B

Rev.	Changes Summary	Performed	Checked	Date

Performed by				
Checked by			Page	Revision
Date	20/07/2026		2 / 2	

This document is exclusive property of WEG S/A. Reprinting is not allowed without written authorization of WEG S/A.
Subject to change without notice

ATENÇÃO/ATTENTION
MOTOR DEVE SER LIGADO APENAS NA POSIÇÃO VERTICAL
MOTOR MUST BE ENERGIZED ONLY IN THE VERTICAL POSITION

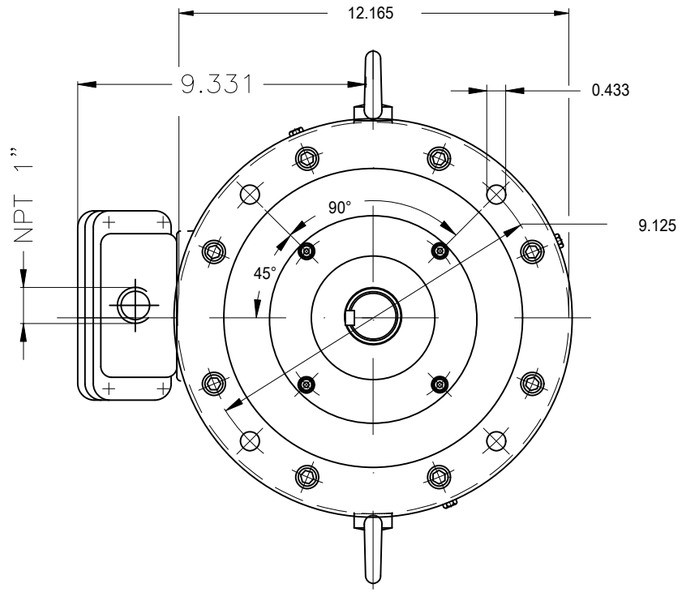

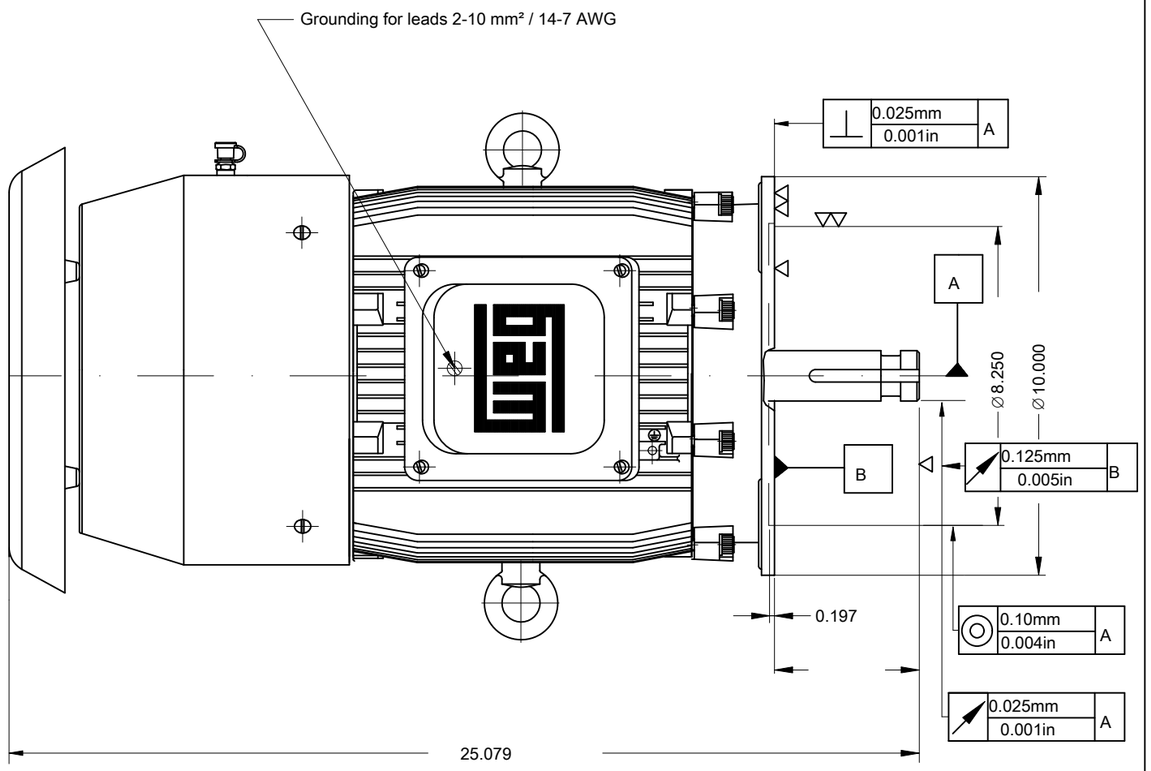

Reduced balancing with half key
Packing - crate
Plastic flat plug
Shaft material - SAE/ABNT 1040/45
B key
With drip cover
Fan cover - steel plate
NDE sealing - lip seal
Sealing - oil seal ring
Without epoxi in the cables outlet
Grease - Mobil Polyrex EM
Bearing cap
Without terminal block
Without overload protector at bearing
Without Space Heaters
Without thermal protection on bearings
Without alarm thermal protection
Without switch off thermal protection
Rubber drain plug
With grease fitting
Aluminum fan
Color RAL 5009
Painting plan 207A
Mounting NEMA W-6
Mounting V1

DE Shaft End

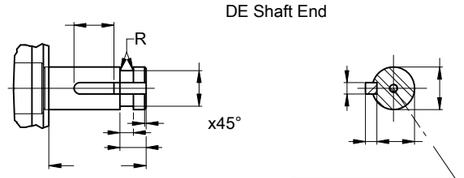

7.5 HP 02 Poles 60 Hz | A

ECM	LOC	SUMMARY OF MODIFICATIONS	EXECUTED	CHECKED	RELEASED	DATE	VER
			HYBRISUSER				00

EXECUTED	HYBRISUSER	THREE PH. MOTOR IN LINE EXTRA THRUST NEMA PREM. EFF.	PREVIEW
CHECKED		FRAME 215LP IP55 TEFC	WDD 00
RELEASED			
REL. DATE		WMO Jaragua do Sul Product Engineering	SHEET 1 / 1

Dimensions in inches
XME A3

WEG's property. Forbidden reproduction without previous authorization.