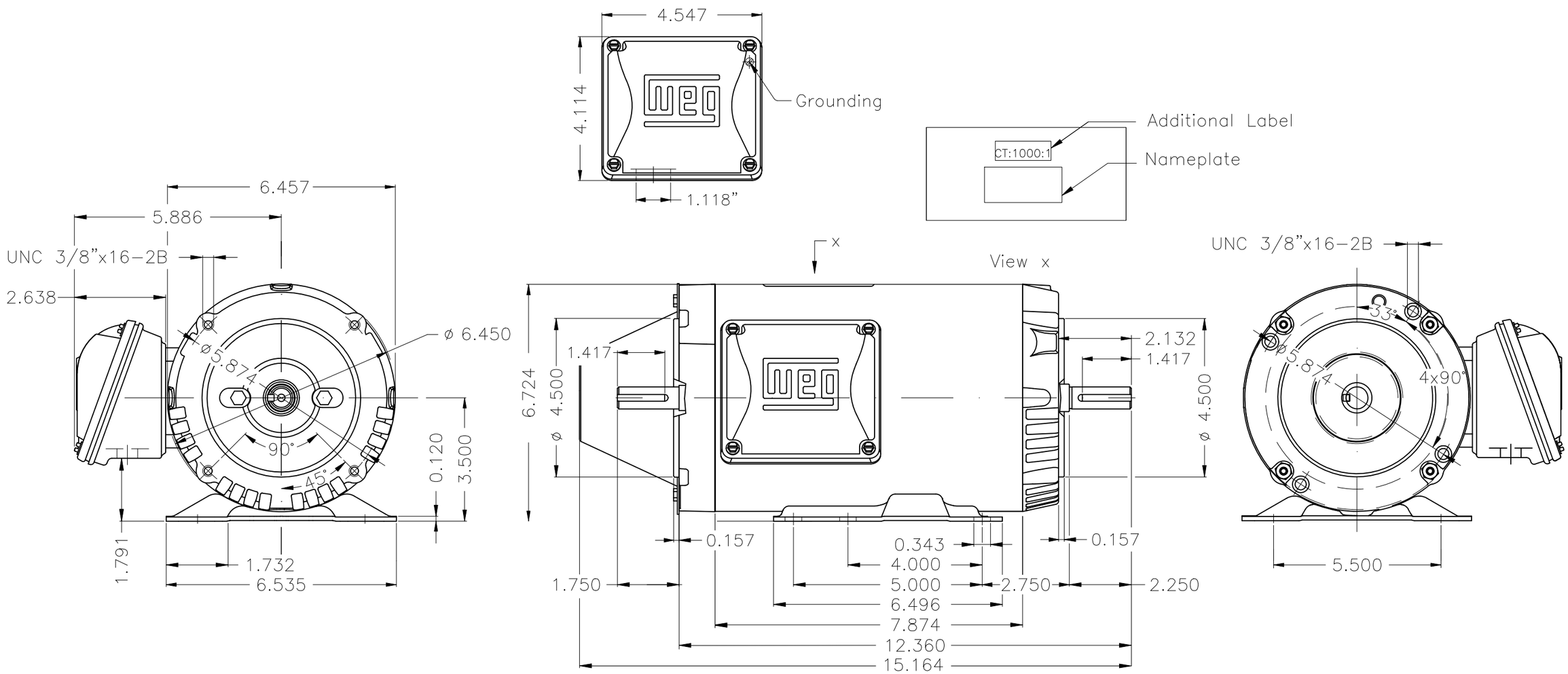

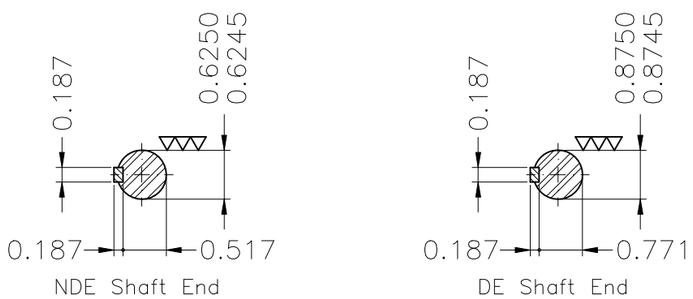

Max safe speed:6000 rpm
Suitable to work for VFD 1000:1 CT
Sealing - V ring
Rubber drain plug
Thermal protection to switch off - thermostat 155°C
Class H insulation - 80K temperature rise
Color Munsell N 1 matte black
Painting plan 207N
Service factor 1.0
Mounting B34D

V.J. PAMENSKY CANADA INC.

ECM	LOC	SUMMARY OF MODIFICATIONS	EXECUTED	CHECKED	RELEASED	DATE	VER
		New drawing	OSCARFLORES	MORALESR	RIOMIGUEL	28.01.2025	00

EXECUTED	OSCARFLORES	THREE PH. MOTOR ROLLED STEEL NEMA PREM. EFF.
CHECKED	MORALESR	FRAME 143/5TCZ IP55 TENV
RELEASED	RIOMIGUEL	
REL. DATE	28.01.2025	WEG HUEHUETOCA [Ventas Exportacion]

1639574721

WDD 00

SHEET 1 / 1

1 HP 04 Poles 60 Hz 422517511 A

PRELIMINARY DOCUMENT - Not to be used for installation purposes.

Dimensions in inches

A3 XME

WEG's property. Forbidden reproduction without previous authorization.

10012955159-00