DATA SHEET

Three Phase Induction Motor - Squirrel Cage

Customer :

Product line	: W21 In Line Extra Thrust NEMA Premium Efficiency Three-Phase	Product code :	18733373

Frame	: 254LP	Locked rotor time	: 36s (cold) 20s (hot)
Output	: 15 HP (11 kW)	Temperature rise	: 80 K
Poles	: 2	Duty cycle	: Cont.(S1)
Frequency	: 60 Hz	Ambient temperature	: -20°C to +40°C
Rated voltage	: 575 V	Altitude	: 1000 m.a.s.l.
Rated current	: 14.0 A	Protection degree	: IP55
L. R. Amperes	: 93.8 A	Cooling method	: IC411 - TEFC
LRC	: 6.7x(Code G)	Mounting	: W-6
No load current	: 4.42 A	Rotation[1]	: Both (CW and CCW)
Rated speed	: 3540 rpm	Starting method	: Direct On Line
Slip	: 1.67 %	Approx. weight[3]	: 169 kg
Rated torque	: 3.08 kgfm		
Locked rotor torque	: 180 %		
Breakdown torque	: 290 %		
Insulation class	: F		
Service factor	: 1.15		
Moment of inertia (J)	: 0.0425 kgm²		
Design	: B		

Output	25%	50%	75%	100%
Efficiency (%)	0.000	87.4	89.4	91.0
Power Factor	0.00	0.76	0.84	0.87

Foundation loads	
Max. traction	: 0 kgf
Max. compression	: 0 kgf

Losses at normative operating points (speed;torque), in percentage of rated output power

P1 (0,9;1,0)	P2 (0,5;1,0)	P3 (0,25;1,0)	P4 (0,9;0,5)	P5 (0,5;0,5)	P6 (0,5;0,25)	P7 (0,25;0,25)
9.3	7.0	6.6	5.1	2.9	1.9	1.1

		Drive end	Non drive end
Bearing type	:	6309	7309BECB
Sealing	:	Oil Seal	Not Applicable
Lubrication interval	:	7898 h	4933 h
Lubricant amount	:	13 g	13 g
Lubricant type	:	Mobil Polyrex EM	

Notes
In Line Extra Thrust - NEMA Premium Efficiency

This revision replaces and cancel the previous one, which must be eliminated.
(1) Looking the motor from the shaft end.
(2) Measured at 1m and with tolerance of +3dB(A).
(3) Approximate weight subject to changes after manufacturing process.
(4) At 100% of full load.

These are average values based on tests with sinusoidal power supply, subject to the tolerances stipulated in NEMA MG-1.

Rev.	Changes Summary	Performed	Checked	Date

Performed by				
Checked by			Page	Revision
Date	20/07/2026		1 / 2	

This document is exclusive property of WEG S/A. Reprinting is not allowed without written authorization of WEG S/A.
Subject to change without notice

LOAD PERFORMANCE CURVE

Three Phase Induction Motor - Squirrel Cage

Customer	:

Product line	: W21 In Line Extra Thrust NEMA Premium Efficiency Three-Phase	Product code :	18733373

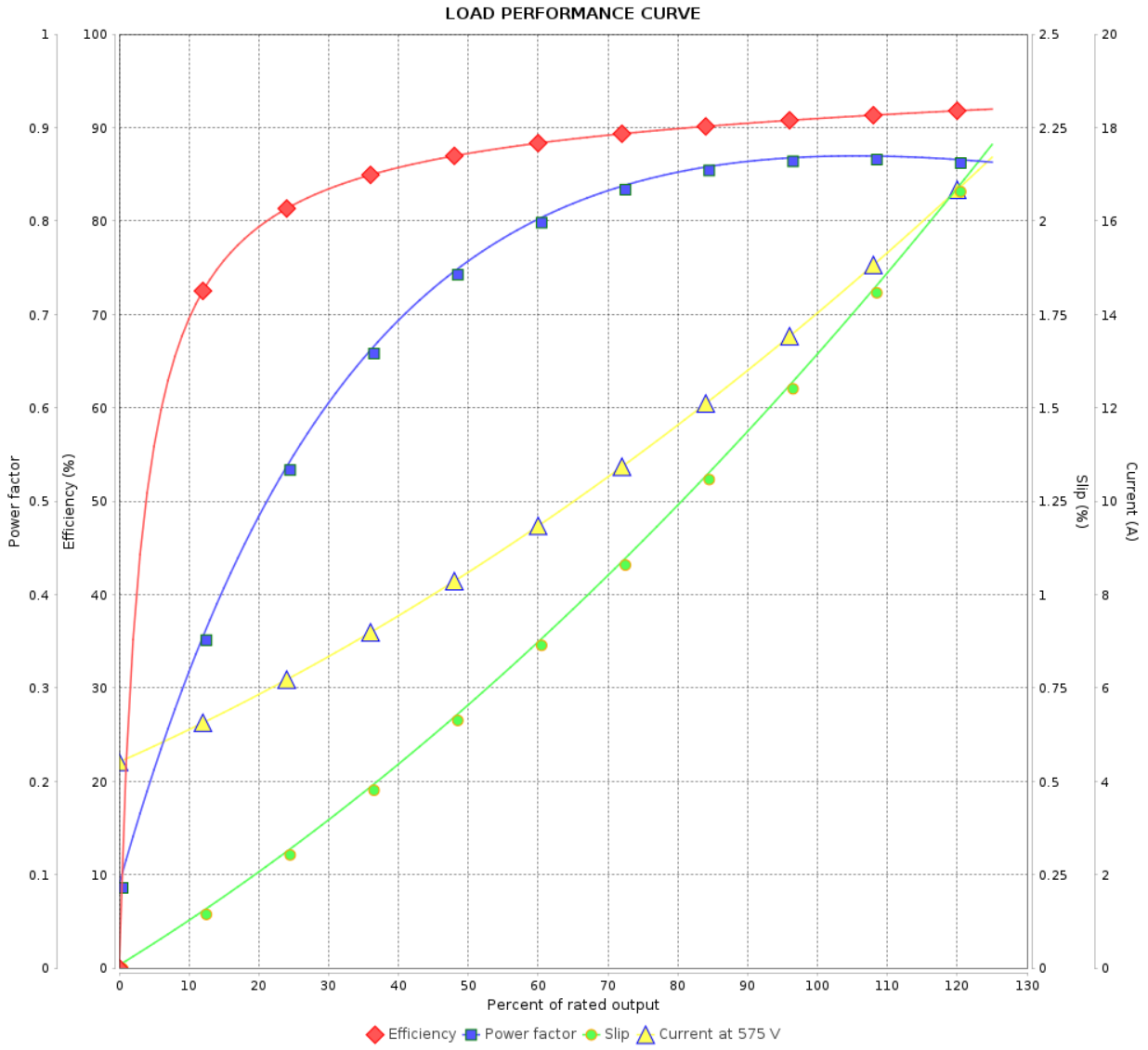

Performance	: 575 V 60 Hz 2P

Rated current	: 14.0 A	Moment of inertia (J)	: 0.0425 kgm²
LRC	: 6.7	Duty cycle	: Cont.(S1)
Rated torque	: 3.08 kgfm	Insulation class	: F
Locked rotor torque	: 180 %	Service factor	: 1.15
Breakdown torque	: 290 %	Temperature rise	: 80 K
Rated speed	: 3540 rpm	Design	: B

Rev.	Changes Summary	Performed	Checked	Date

Performed by				
Checked by			Page	Revision
Date	20/07/2026		2 / 2	

This document is exclusive property of WEG S/A. Reprinting is not allowed without written authorization of WEG S/A.
Subject to change without notice

ATENÇÃO/ATTENTION
MOTOR DEVE SER LIGADO APENAS NA POSIÇÃO VERTICAL
MOTOR MUST BE ENERGIZED ONLY IN THE VERTICAL POSITION

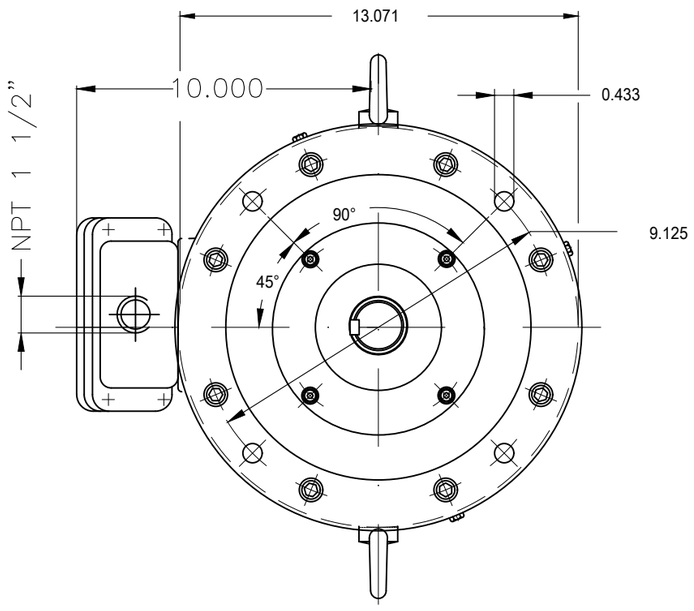

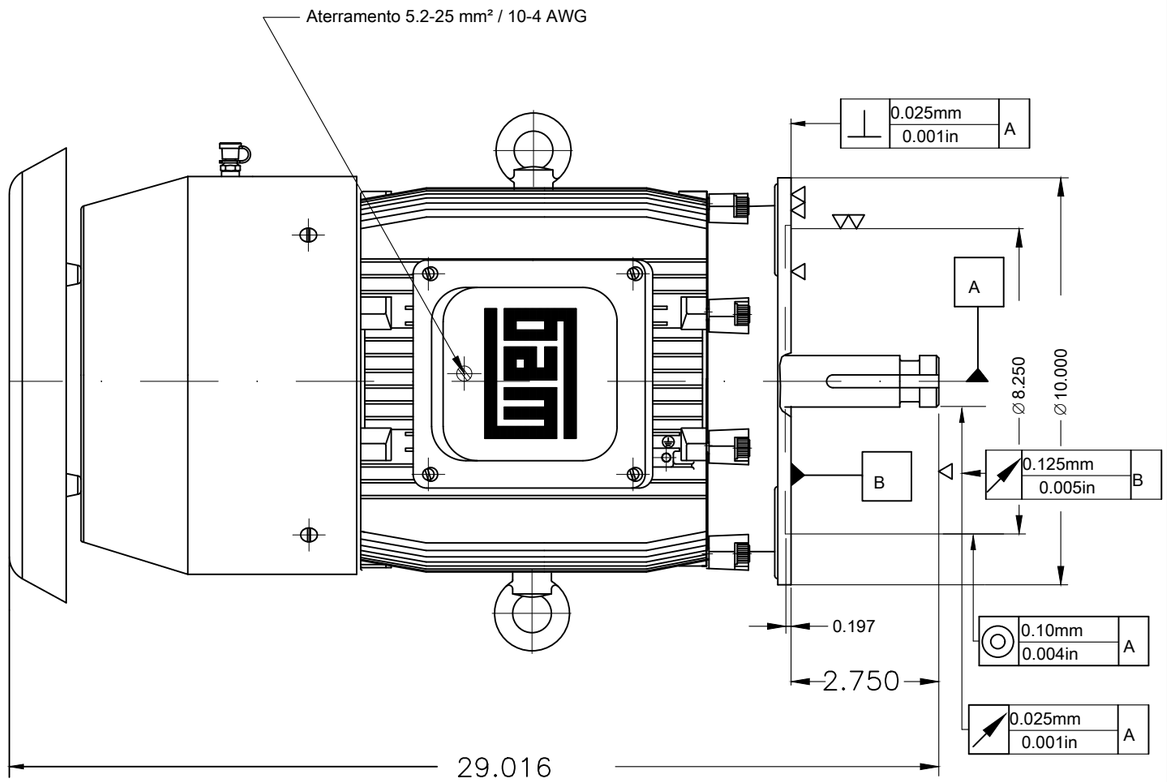

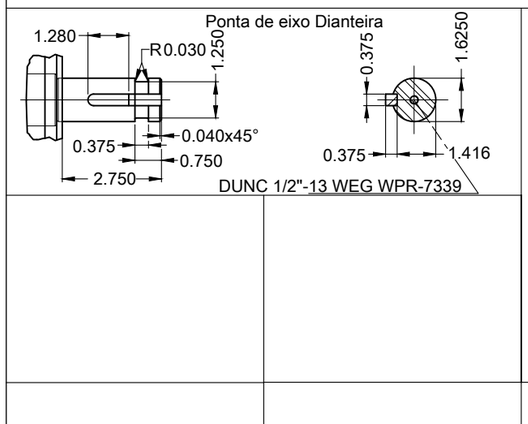

Forma construtiva NEMA W-6
Forma construtiva V1

15 HP 02 Polos 60 Hz | A

V.J. PAMENSKY CANADA INC.

ECM	LOC	RESUMO MODIFICAÇÃO	EXECUTADO	VERIFICADO	LIBERADO	DATA	VER
500002946518		422721033/0 INITIAL ISSUE	CLEITONGS	CLEITONGS	HONNICKE	18.06.2025	00

EXECUTOR	CLEITONGS	MOTOR TRIF. IN LINE EXTRA THRUST NEMA PREM. EFF.	10013467707
VERIFICADOR	CLEITONGS	CARCAÇA 254LP IP55 TEFC	000 / 00
LIBERADOR	HONNICKE		
DATA LB.	18.06.2025	WMO JARAGUA DO SUL [Gestao Ordens Exportacao]	FOLHA 1 / 1

XME A3

LIBERADO SISTEMADimensões em polegada

CÓPIA SEM CONTROLE

Propriedade da WEG. Proibida reprodução sem autorização prévia.

1713697603-00