DATA SHEET

Three Phase Induction Motor - Squirrel Cage

Customer :

Product line : W21 In Line Extra Thrust NEMA Premium Efficiency Three-Phase

Product code : 17723992

Frame	: 215LP
Output	: 10 HP (7.5 kW)
Poles	: 2
Frequency	: 60 Hz
Rated voltage	: 575 V
Rated current	: 9.38 A
L. R. Amperes	: 64.7 A
LRC	: 6.9x(Code H)
No load current	: 2.80 A
Rated speed	: 3525 rpm
Slip	: 2.08 %
Rated torque	: 2.06 kgfm
Locked rotor torque	: 210 %
Breakdown torque	: 280 %
Insulation class	: F
Service factor	: 1.15
Moment of inertia (J)	: 0.0232 kgm²
Design	: B

Locked rotor time	: 36s (cold) 20s (hot)
Temperature rise	: 80 K
Duty cycle	: Cont.(S1)
Ambient temperature	: -20°C to +40°C
Altitude	: 1000 m.a.s.l.
Protection degree	: IP55
Cooling method	: IC411 - TEFC
Mounting	: W-6
Rotation[1]	: Both (CW and CCW)
Noise level[2]	: 72.0 dB(A)
Starting method	: Direct On Line
Approx. weight[3]	: 108 kg

Output	25%	50%	75%	100%
Efficiency (%)	0.000	88.5	90.2	90.2
Power Factor	0.00	0.79	0.86	0.89

Foundation loads

Max. traction : 0 kgf

Max. compression : 0 kgf

Losses at normative operating points (speed;torque), in percentage of rated output power

P1 (0,9;1,0)	P2 (0,5;1,0)	P3 (0,25;1,0)	P4 (0,9;0,5)	P5 (0,5;0,5)	P6 (0,5;0,25)	P7 (0,25;0,25)
10.6	8.6	7.5	5.1	3.2	2.0	1.2

		Drive end	Non drive end
Bearing type	:	6309	7306BECB
Sealing	:	Oil Seal	Lip Seal
Lubrication interval	:	7898 h	8437 h
Lubricant amount	:	13 g	7 g
Lubricant type	:	Mobil Polyrex EM	

Notes
In Line Extra Thrust Motor
NEMA Premium Efficiency

This revision replaces and cancel the previous one, which must be eliminated.
(1) Looking the motor from the shaft end.
(2) Measured at 1m and with tolerance of +3dB(A).
(3) Approximate weight subject to changes after manufacturing process.
(4) At 100% of full load.

These are average values based on tests with sinusoidal power supply, subject to the tolerances stipulated in NEMA MG-1.

Rev.	Changes Summary	Performed	Checked	Date

Performed by				
Checked by			Page	Revision
Date	20/07/2026		1 / 2	

This document is exclusive property of WEG S/A. Reprinting is not allowed without written authorization of WEG S/A.
Subject to change without notice

LOAD PERFORMANCE CURVE

Three Phase Induction Motor - Squirrel Cage

Customer	:

Product line	: W21 In Line Extra Thrust NEMA Premium Efficiency Three-Phase	Product code :	17723992

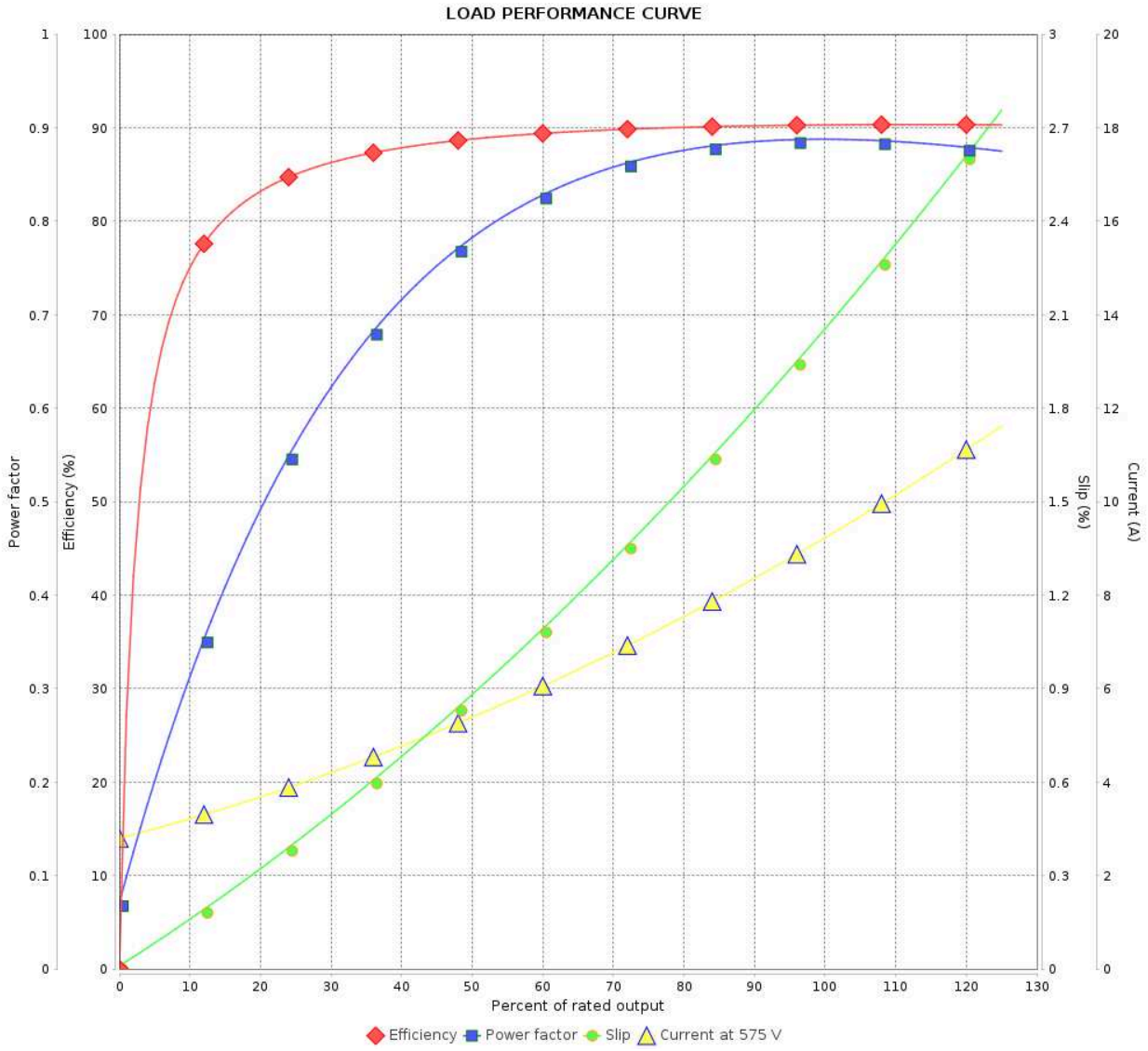

Performance	: 575 V 60 Hz 2P

Rated current	: 9.38 A	Moment of inertia (J)	: 0.0232 kgm²
LRC	: 6.9	Duty cycle	: Cont.(S1)
Rated torque	: 2.06 kgfm	Insulation class	: F
Locked rotor torque	: 210 %	Service factor	: 1.15
Breakdown torque	: 280 %	Temperature rise	: 80 K
Rated speed	: 3525 rpm	Design	: B

Rev.	Changes Summary	Performed	Checked	Date

Performed by				
Checked by			Page	Revision
Date	20/07/2026		2 / 2	

This document is exclusive property of WEG S/A. Reprinting is not allowed without written authorization of WEG S/A.
Subject to change without notice

ATENÇÃO/ATTENTION
MOTOR DEVE SER LIGADO APENAS NA POSIÇÃO VERTICAL
MOTOR MUST BE ENERGIZED ONLY IN THE VERTICAL POSITION

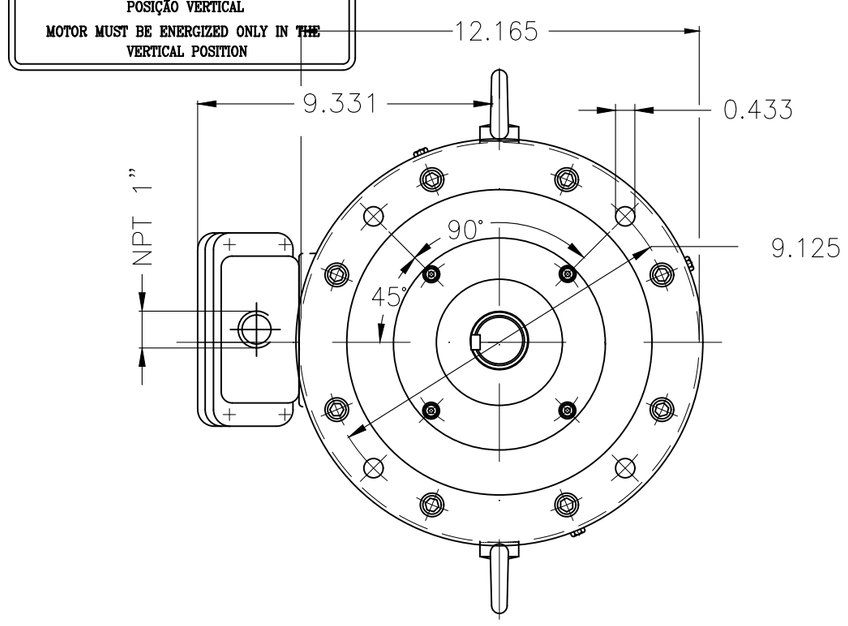

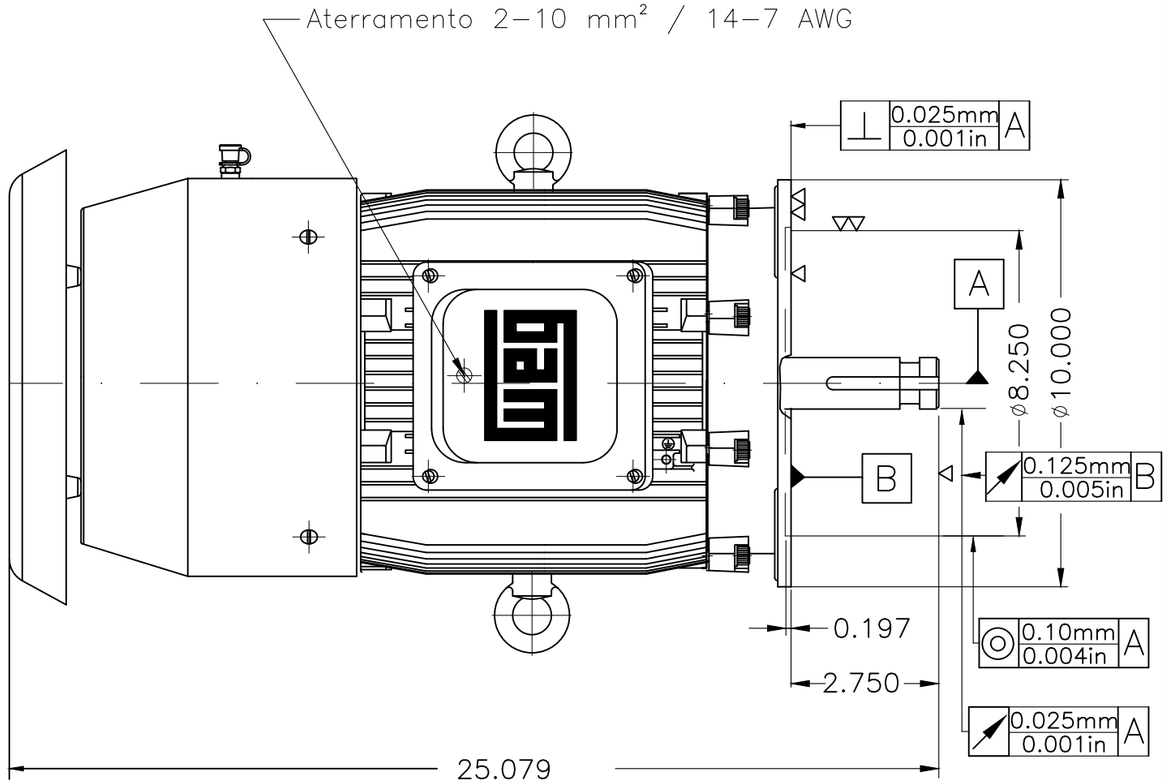

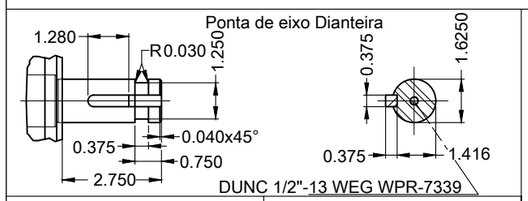

Placa de identificação com a informação da linha do inversor
Forma construtiva NEMA W-6
Forma construtiva V1

10 HP 02 Polos 60 Hz | A

V.J. PAMENSKY CANADA INC.

ECM	LOC	RESUMO MODIFICAÇÃO	EXECUTADO	VERIFICADO	LIBERADO	DATA	VER
500002555450		422119857/0 INITIAL ISSUE	CLEITONGS	CLEITONGS	KITZBERGER	29.01.2024	00

EXECUTOR	CLEITONGS	MOTOR TRIF. IN LINE EXTRA THRUST NEMA PREM. EFF.	10011801373
VERIFICADOR	CLEITONGS	CARCAÇA 215LP IP55 TEFC	000 / 00
LIBERADOR	KITZBERGER		
DATA LB.	29.01.2024	WMO Jaragua do Sul Engenharia de Produto	FOLHA 1 / 1

CÓPIA SEM CONTROLE
Dimensões em polegada
LIBERADO
A3
XME

Propriedade da WEG. Proibida reprodução sem autorização prévia.

1486245883-00