DATA SHEET

Single Phase Induction Motor - Squirrel Cage

Customer	:

Product line	: Single-Phase	Product code :	13626077

Frame	: 48	Cooling method	: IC01 - ODP
Insulation class	: F	Mounting	: F-1
Duty cycle	: Cont.(S1)	Rotation[1]	: Both (CW and CCW)
Ambient temperature	: -20°C to +40°C	Starting method	: Direct On Line
Altitude	: 1000 m.a.s.l.	Approx. weight[3]	: 9.5 kg
Design	: N	Moment of inertia (J)	: 0.0022 kgm²

Output [HP]		0.5
Poles		4
Frequency [Hz]		60
Rated voltage [V]		115/208-230
Rated current [A]		4.86/3.04-2.43
L. R. Amperes [A]		37.4/23.4-18.7
LRC [A]		7.7x(Code K)
No load current [A]		2.70/1.16-1.35
Rated speed [RPM]		1730
Slip [%]		3.89
Rated torque [kgfm]		0.210
Locked rotor torque [%]		300
Breakdown torque [%]		270
Service factor		
Temperature rise		80 K
Locked rotor time		27s (cold) 15s (hot)
Noise level[2]		50.0 dB(A)
Efficiency (%)	25%	
	50%	65.0
	75%	73.0
	100%	76.2
Power Factor	25%	
	50%	0.72
	75%	0.81
	100%	0.87

		Drive end	Non drive end
Bearing type	:	6203 ZZ	6202 ZZ
Sealing	:	Without Bearing Seal	Without Bearing Seal
Lubrication interval	:	-	-
Lubricant amount	:	-	-
Lubricant type	:	Mobil Polyrex EM	

Foundation loads

Max. traction : 16 kgf

Max. compression : 25 kgf

Notes

This revision replaces and cancel the previous one, which must be eliminated.
(1) Looking the motor from the shaft end.
(2) Measured at 1m and with tolerance of +3dB(A).
(3) Approximate weight subject to changes after manufacturing process.
(4) At 100% of full load.

These are average values based on tests with sinusoidal power supply, subject to the tolerances stipulated in NEMA MG-1.

Rev.	Changes Summary	Performed	Checked	Date

Performed by				
Checked by			Page	Revision
Date	17/05/2022		1 / 2	

This document is exclusive property of WEG S/A. Reprinting is not allowed without written authorization of WEG S/A.
Subject to change without notice

LOAD PERFORMANCE CURVE

Single Phase Induction Motor - Squirrel Cage

Customer	:		
Product line	: Single-Phase	Product code :	13626077

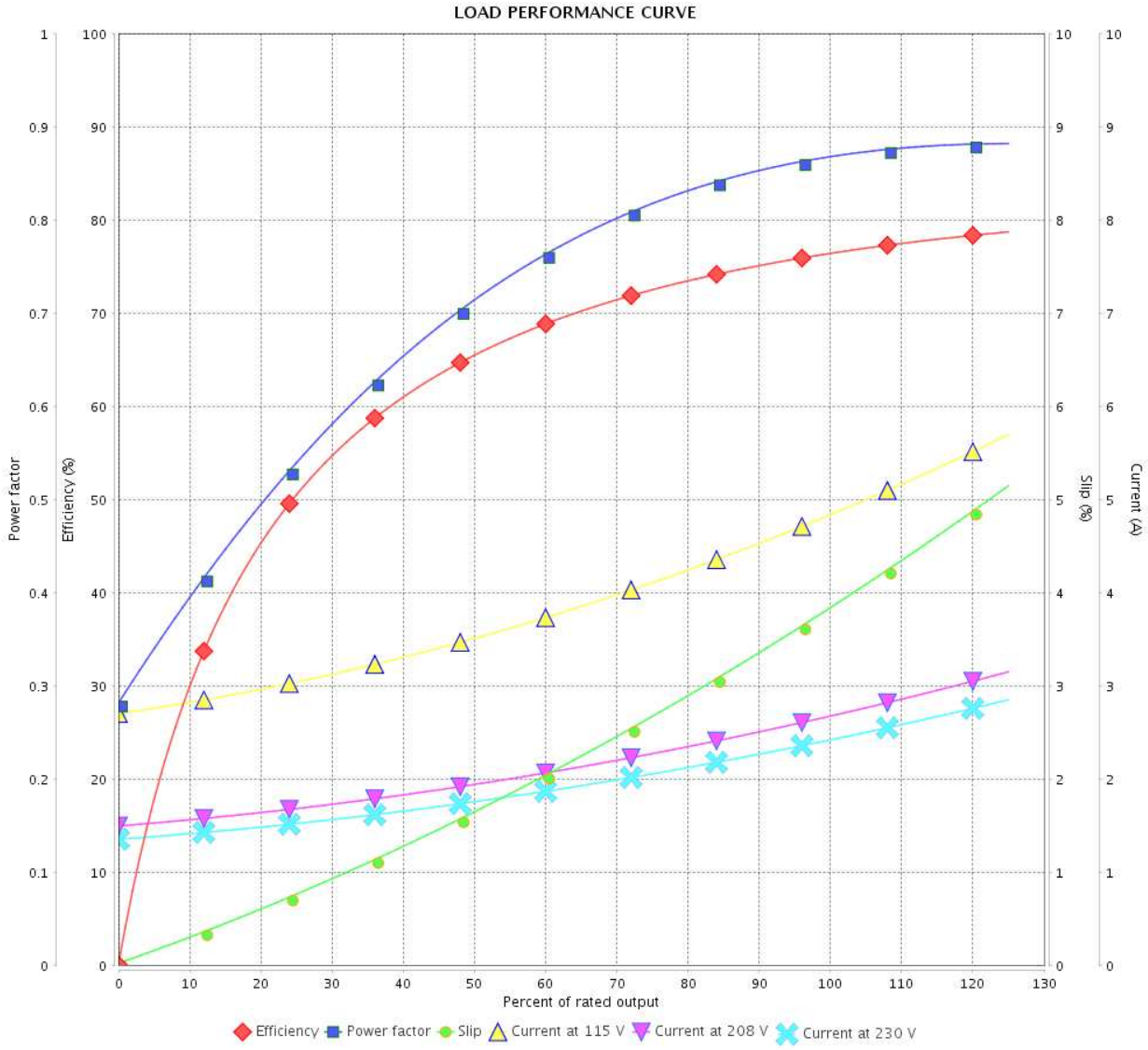

Performance	: 115/208-230 V 60 Hz 4P		
Rated current	: 4.86/3.04-2.43 A	Moment of inertia (J)	: 0.0022 kgm²
LRC	: 7.7	Duty cycle	: Cont.(S1)
Rated torque	: 0.210 kgfm	Insulation class	: F
Locked rotor torque	: 300 %	Service factor	:
Breakdown torque	: 270 %	Temperature rise	: 80 K
Rated speed	: 1730 rpm	Design	: N

Rev.	Changes Summary	Performed	Checked	Date

Performed by				
Checked by			Page	Revision
Date	17/05/2022		2 / 2	

This document is exclusive property of WEG S/A. Reprinting is not allowed without written authorization of WEG S/A.
Subject to change without notice

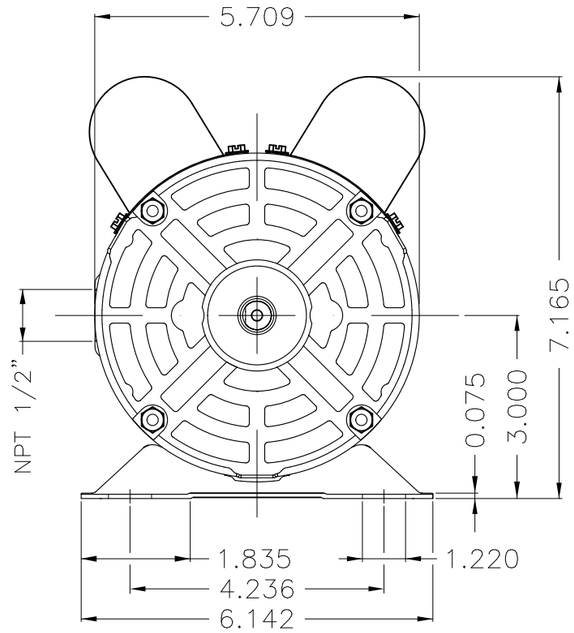

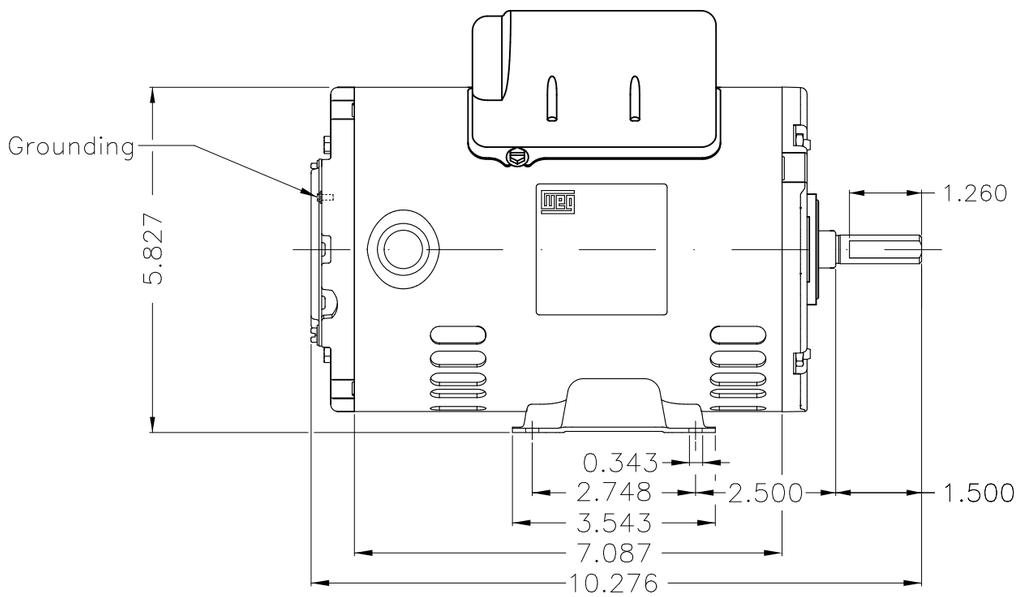

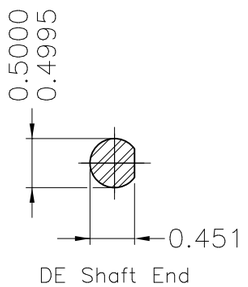

Color Munsell N 1 matte black

Painting plan 207N

Mounting F-1/B3R(D)

ECM	LOC	SUMMARY OF MODIFICATIONS	EXECUTED	CHECKED	RELEASED	DATE	VER
			HYBRISUSER				00

EXECUTED	HYBRISUSER	SINGLE PH. MOTOR ROLLED STEEL PREM. EFF.	PREVIEW		
CHECKED		FRAME 48 IP21 ODP	WDD	00	
RELEASED					
REL. DATE		WMO Jaragua do Sul Product Engineering	SHEET	1 / 1	

0.5 HP 04 Poles 60 Hz

A

Dimensions in inches

XME A3

WEG's property. Forbidden reproduction without previous authorization.