DATA SHEET

Three Phase Induction Motor - Squirrel Cage

Customer	:
Sales document	: 1773532-000010

Product line	: Special Motor
Product code	: 12465079

Frame	: 444/5LP
Output	: 125 HP (90 kW)
Poles	: 4
Frequency	: 60 Hz
Rated voltage	: 575 V
Rated current	: 110 A
L. R. Amperes	: 704 A
LRC	: 6.4 Code G
No load current	: 37.0 A
Rated speed	: 1785 rpm
Slip	: 0.83 %
Rated torque	: 50.8 kgfm
Locked rotor torque	: 200 %
Pull up torque	: 170 %
Breakdown torque	: 220 %
Insulation class	: F
Service factor	: 1.15
Moment of inertia (J)	: 2.41 kgm²

Locked rotor time	: 18 s (hot) 0 s (cold)
Temperature rise[4]	: 80 K
Duty cycle	: S1
Ambient temperature	: -20 °C to +40 °C
Altitude	: 1000 m.a.s.l
Protection degree	: IP55
Cooling method	: IC411 - TEFC
Mounting	: V1
Rotation[1]	: Both
Noise level[2]	: 76 dB(A)
Starting method	: Direct On Line
Approx. weight[3]	: 833 kg
Design	: B

Output	Start	50%	75%	100%
Efficiency (%)	-	95.0	95.4	95.4
Power Factor	0.00	0.76	0.83	0.86

Load type	: -
Load torque	: -
Load inertia (J=GD²/4)	: -

	Drive end	Non drive end
Bearing type	6314	7315BECB
Lubrication interval	4895 h	3268 h
Lubricant amount	27 g	30 g
Lubricant type	MOBIL POLYREX EM	

Notes:
NEMA Premium Efficiency
IN LINE EXTRA THRUST

Losses at normative operating points (speed;torque), in percentage of rated output power

P1 (0,9;1,0)	P2 (0,5;1,0)	P3 (0,25;1,0)	P4 (0,9;0,5)	P5 (0,5;0,5)	P6 (0,5;0,25)	P7 (0,25;0,25)
0.00	0.00	0.00	0.00	0.00	0.00	0.00

Standards

Specification	: MG1 - Part 10	Vibration	: MG1 - Part 7
Test	: MG1 - Part 12	Tolerance	: MG1 - Part 12
Noise	: MG1 - Part 9		

This revision replaces and cancel the previous one, which must be eliminated..
(1) Looking the motor from the shaft end.
(2) Measured at 1m and with tolerance of +0dB(A).
(3) Approximate weight, subject to be changed after manufacturing process.
(4) At 100% of full load.

These are average values based on tests with sinusoidal power supply, subject to the tolerances stipulated in NEMA MG 1-12.

Rev.	Changes Summary	Performed	Checked	Date
				14/06/2013

Performed by	natashas	86910/2013	
Checked by	lais	Page	Revision
Date	13/06/2013	1/2	1

This document is exclusive property of WEG S/A. Reprinting is not allowed without written authorization of WEG S/A.

LOAD PERFORMANCE CURVE

Three Phase Induction Motor - Squirrel Cage

Customer	:
Sales document	: 1773532-000010
Product line	: Special Motor
Product code	: 12465079

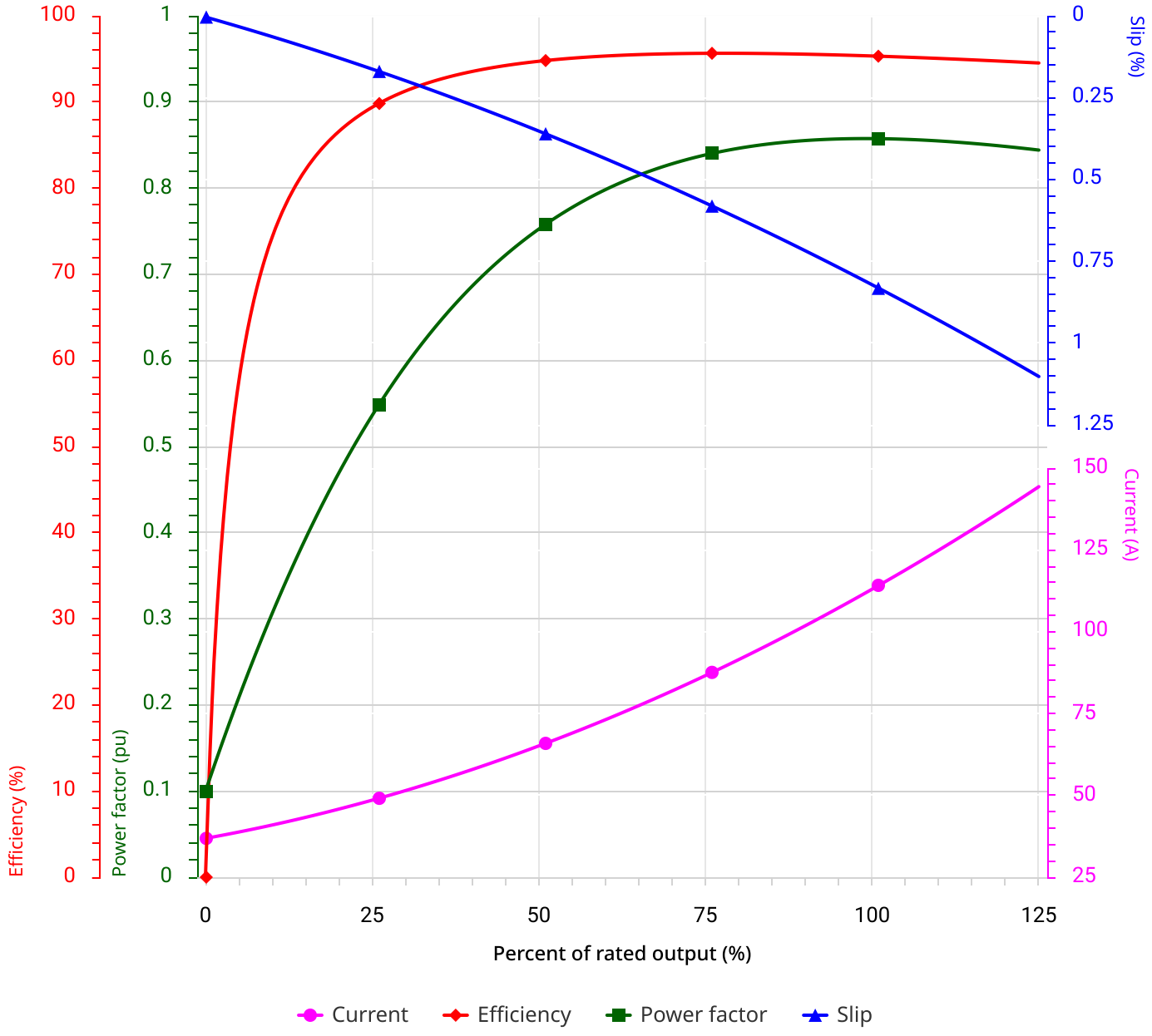

Performance	: 125 HP (90 kW) 575V 60Hz 4P 444/5LP

Rated current	: 110 A	Moment of inertia (J)	: 2.41 kgm²
LRC	: 6.4 Code G	Duty cycle	: Cont.(S1)
Rated torque	: 50.8 kgfm	Insulation class	: F
Locked rotor torque	: 200 %	Service factor	: 1.15
Breakdown torque	: 220 %	Temperature rise	: 80 K
Rated speed	: 1785 rpm	Design	: B

Rev.	Changes Summary	Performed	Checked	Date
				14/06/2013

Performed by	natashas		86910/2013	
Checked by	lais		Page	Revision
Date	13/06/2013		2/2	1

This document is exclusive property of WEG S/A. Reprinting is not allowed without written authorization of WEG S/A.

No reproduction of this drawing is allowed written permission of WEG Motores

EIXO		
PADRÃO	X	Dimensões em polegadas
OPCIONAL		Dimensions in inches
ESPECIAL		

CERTIFIED
WEG MOTORES
Certified document.
Not subject to changes.

THIS IS AN UPDATED REVISION, THE PREVIOUS ONE MUST BE DISREGARDED.

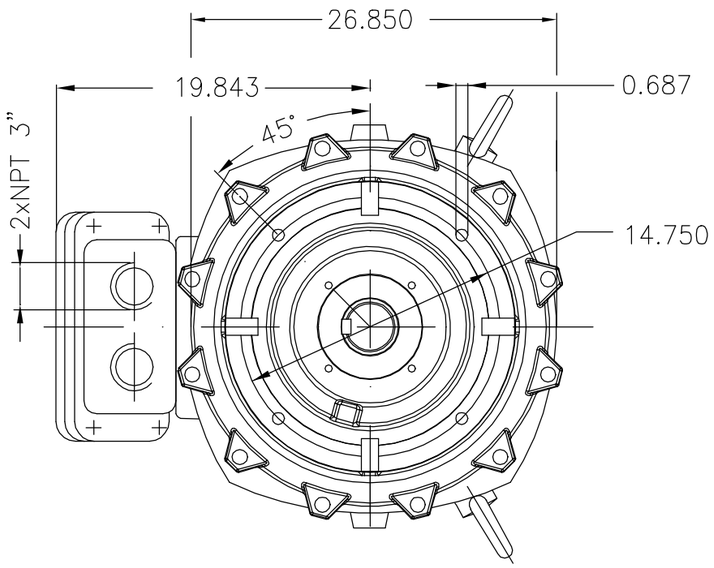

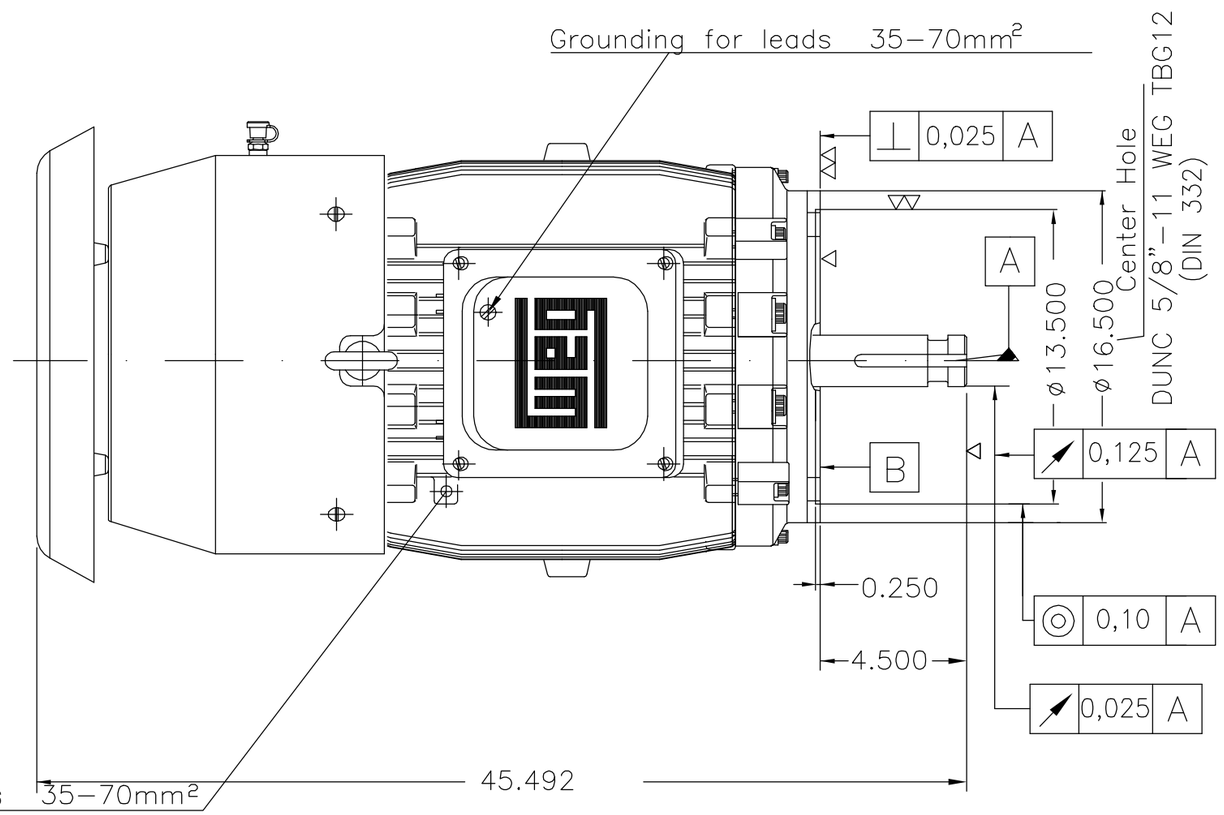

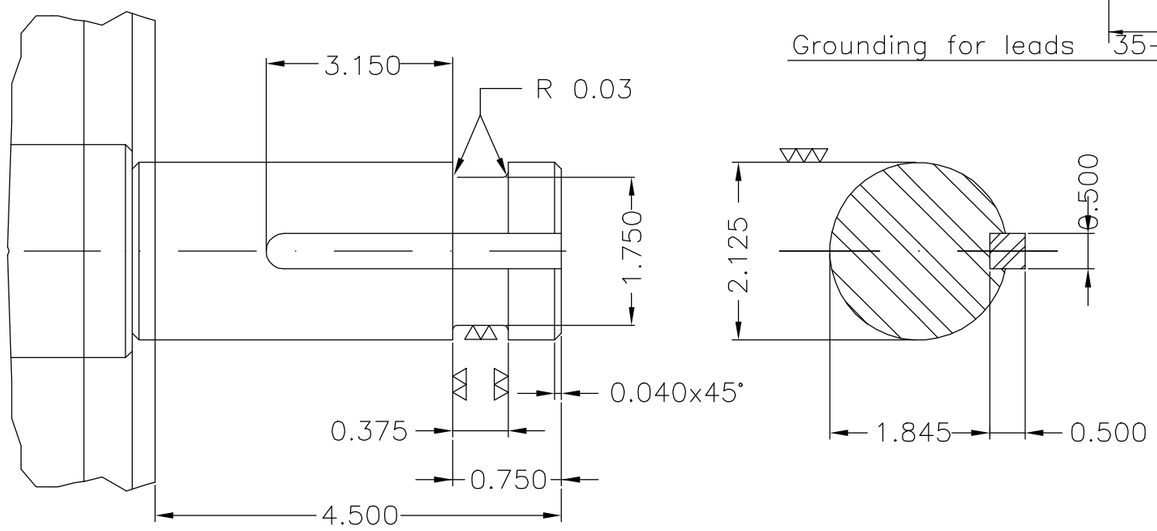

Placa de identificação deve constar NEMA PREMIUM EFFICIENCY / Nameplate shall state NEMA PREMIUM EFFICIENCY
Vedação no mancal dianteiro – retentor com mola / D.E sealing – oil seal ring
Com graxeira / With grease fitting
Vedação no mancal traseiro – retentor / NDE sealing – lip seal
Anel de fixação do rolamento / Bearing cap
Plano de pintura 203A / Painting plan 203A
Forma construtiva V1 / Mounting V1

V.J. PAMENSKY CANADA INC.

ECM	LOC	SUMMARY OF MODIFICATIONS	EXECUTED	CHECKED	RELEASED	DATE	VER
500001594952		ALTERADO CONF. CLAIM 415204042	RICLAV	DALTONR	DALTONR	24.05.2019	06
500000781691		ALT.CONFORME CLAIM 412907297	ANDERSONLB	DEISEL	DEISEL	05.08.2013	05

EXECUTED	ADRIANAP	THREE-PHASE IN LINE EXTRA THRUST MOTOR	10002299391		
CHECKED	DVEGINI	FRAME 444/5LP IP55	000	06	
RELEASED	DVEGINI				
REL DT	03.06.2013	WMO JARAGUA DO SUL ENGENHARIA DE PRODUTO	SHEET	1 / 1	

125 HP 04 Poles 60Hz 412838403/0 MEC.

A3

UNCONTROLLED COPY

RELEASED

ZME

WEG's property. Forbidden reproduction without previous authorization.