DATA SHEET

Single Phase Induction Motor - Squirrel Cage

Customer :

Product line : Centrifugal Pump Single-Phase Start Capacitor

Product code : 10678049

Frame	: D56C	Locked rotor time	: 10s (cold) 6s (hot)
Output	: 1.5 HP (1.1 kW)	Temperature rise	: 80 K
Poles	: 2	Duty cycle	: Cont.(S1)
Frequency	: 60 Hz	Ambient temperature	: -20°C to +40°C
Rated voltage	: 115/208-230 V	Altitude	: 1000 m.a.s.l.
Rated current	: 17.1/8.80-8.55 A	Protection degree	: IP55
L. R. Amperes	: 116/59.8-58.1 A	Cooling method	: IC411 - TEFC
LRC	: 6.8x(Code K)	Mounting	: F-1
No load current	: 10.8/4.66-5.40 A	Rotation¹	: Both (CW and CCW)
Rated speed	: 3480 rpm	Noise level²	: 55.0 dB(A)
Slip	: 3.33 %	Starting method	: Direct On Line
Rated torque	: 0.313 kgfm	Approx. weight³	: 16.3 kg
Locked rotor torque	: 250 %		
Breakdown torque	: 250 %		
Insulation class	: B		
Service factor	: 1.15		
Moment of inertia (J)	: 0.0025 kgm²		

Output	50%	75%	100%
Efficiency (%)	62.0	69.0	70.0
Power Factor	0.61	0.72	0.80

Foundation loads

Max. traction	: 17 kgf
Max. compression	: 33 kgf

		Drive end	Non drive end
Bearing type	:	6204 2RS	6202 2RS
Sealing	:	V'Ring	V'Ring
Lubrication interval	:	-	-
Lubricant amount	:	-	-
Lubricant type	:	Mobil Polyrex EM	

Notes

This revision replaces and cancel the previous one, which must be eliminated.
(1) Looking the motor from the shaft end.
(2) Measured at 1m and with tolerance of +3dB(A).
(3) Approximate weight subject to changes after manufacturing process.
(4) At 100% of full load.

These are average values based on tests with sinusoidal power supply, subject to the tolerances stipulated in NEMA MG-1.

Rev.	Changes Summary	Performed	Checked	Date

Performed by				
Checked by			Page	Revision
Date	24/10/2024		1 / 2	

This document is exclusive property of WEG S/A. Reprinting is not allowed without written authorization of WEG S/A.
Subject to change without notice

LOAD PERFORMANCE CURVE

Single Phase Induction Motor - Squirrel Cage

Customer	:

Product line	: Centrifugal Pump Single-Phase Start Capacitor	Product code :	10678049

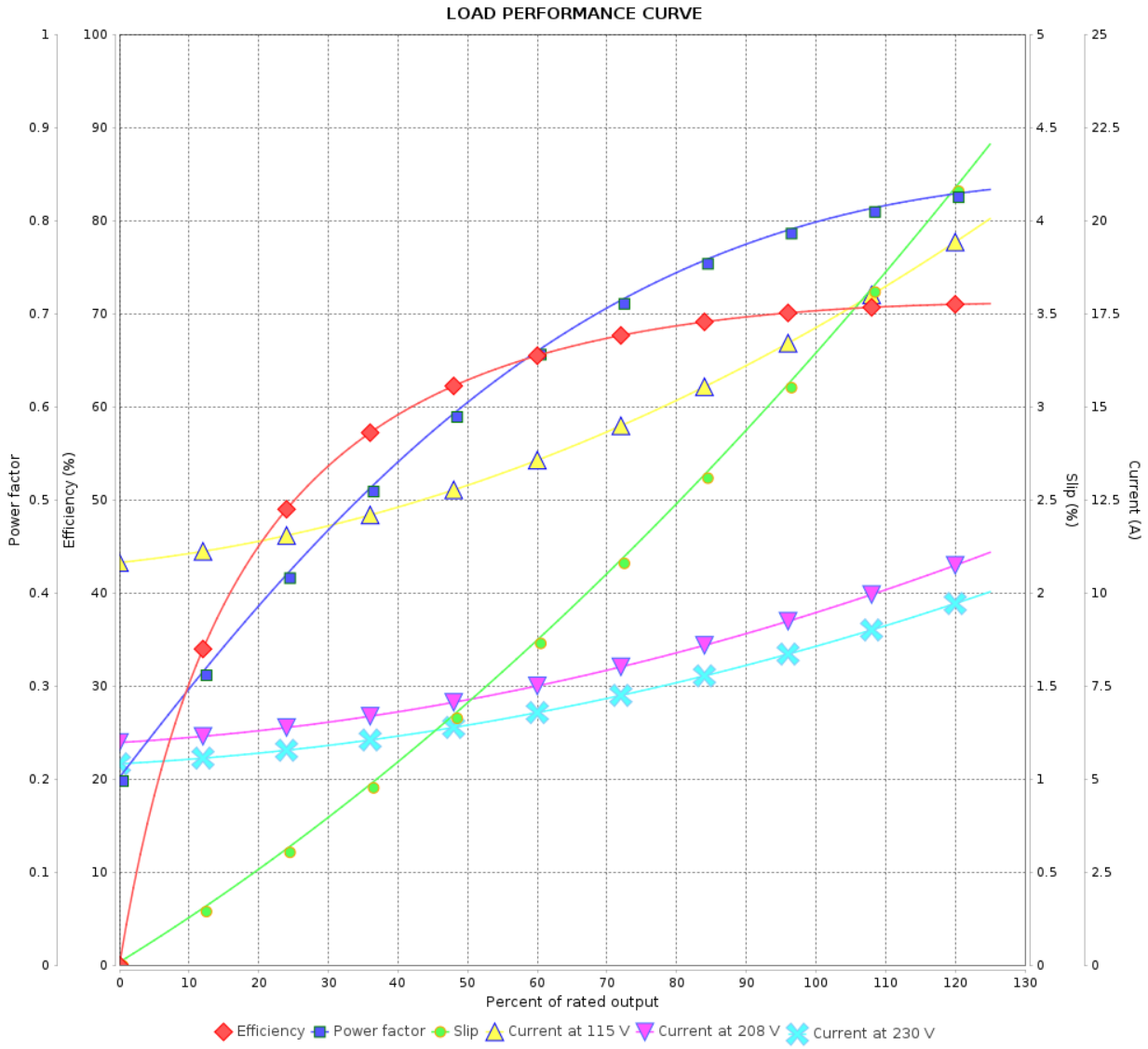

Performance	: 115/208-230 V 60 Hz 2P

Rated current	: 17.1/8.80-8.55 A	Moment of inertia (J)	: 0.0025 kgm²
LRC	: 6.8	Duty cycle	: Cont.(S1)
Rated torque	: 0.313 kgfm	Insulation class	: B
Locked rotor torque	: 250 %	Service factor	:
Breakdown torque	: 250 %	Temperature rise	: 80 K
Rated speed	: 3480 rpm		

Rev.	Changes Summary	Performed	Checked	Date

Performed by				
Checked by			Page	Revision
Date	24/10/2024		2 / 2	

This document is exclusive property of WEG S/A. Reprinting is not allowed without written authorization of WEG S/A.
Subject to change without notice

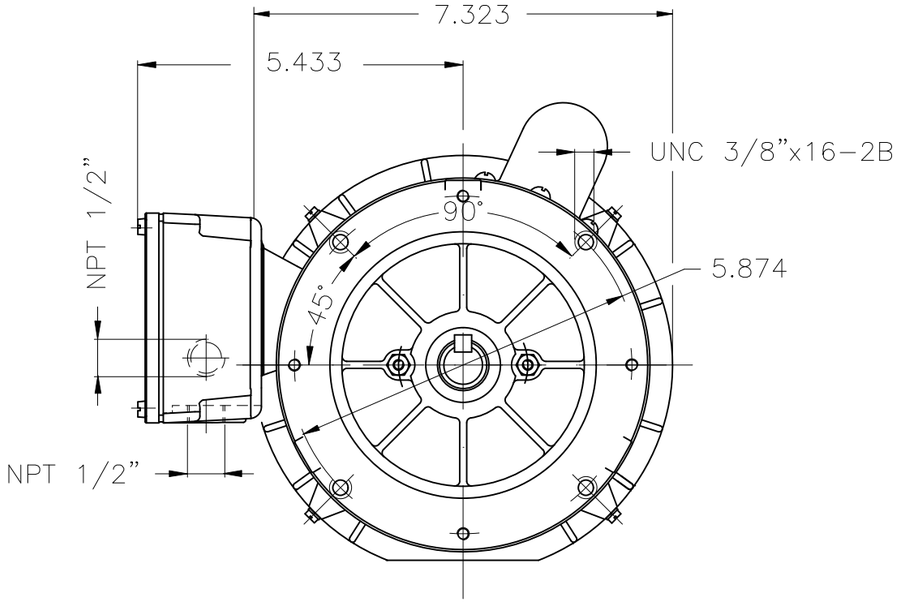

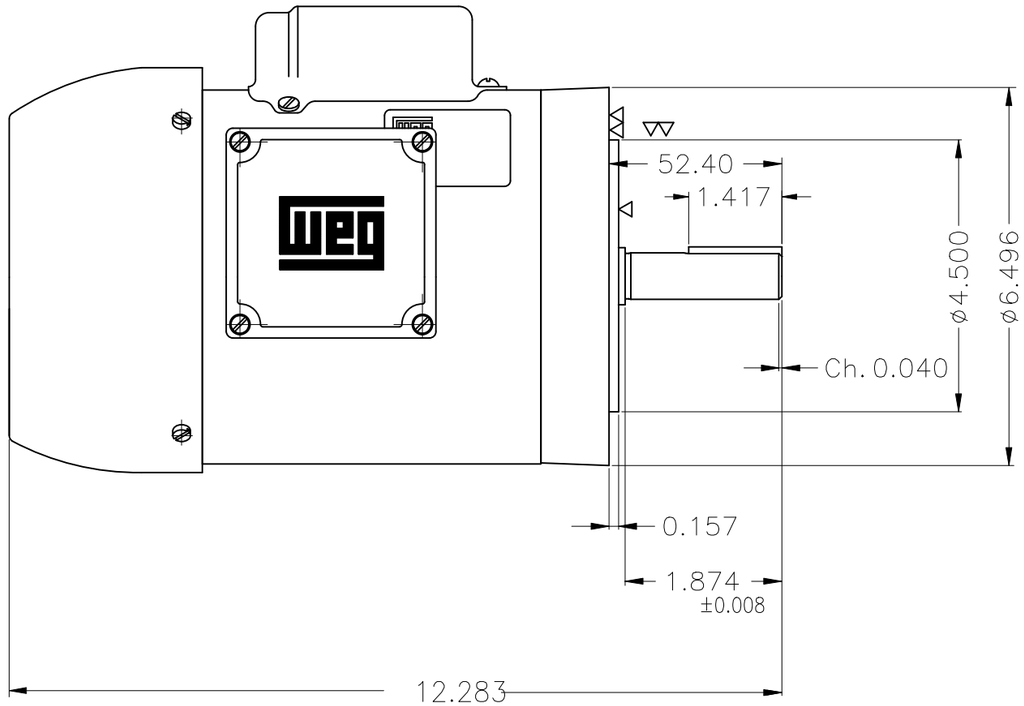

Rotation CW and CCW

Mounting B14R(D)

ECM	LOC	SUMMARY OF MODIFICATIONS	EXECUTED	CHECKED	RELEASED	DATE	VER
			HYBRISUSER				00

EXECUTED	HYBRISUSER	SINGLE PH. MOTOR CENTRIFUGAL PUMP	PREVIEW
CHECKED		FRAME D56C IP55 TEFC	WDD 00
RELEASED			
REL. DATE		WMO Jaragua do Sul Product Engineering	SHEET 1 / 1

1.5 HP 02 Poles 60 Hz

A

Dimensions in inches

A3

XME

WEG's property. Forbidden reproduction without previous authorization.