# DATA SHEET

## Single Phase Induction Motor - Squirrel Cage

Customer :

Product line : Wjet Pump Single-Phase Start Capacitor

Product code : 10597689

| | | | |
|---|---|---|---|
| Frame | : W56C | Locked rotor time | : 10s (cold) 6s (hot) |
| Output | : 0.5 HP (0.37 kW) | Temperature rise | : 80 K |
| Poles | : 2 | Duty cycle | : Cont.(S1) |
| Frequency | : 60 Hz | Ambient temperature | : -20°C to +40°C |
| Rated voltage | : 115/208-230 V | Altitude | : 1000 m.a.s.l. |
| Rated current | : 9.30/3.90-4.65 A | Protection degree | : IP21 |
| L. R. Amperes | : 42.8/17.9-21.4 A | Cooling method | : IC01 - ODP |
| LRC | : 4.6x(Code L) | Mounting | : F-1 |
| No load current | : 7.10/3.06-3.55 A | Rotation¹ | : Both (CW and CCW) |
| Rated speed | : 3465 rpm | Starting method | : Direct On Line |
| Slip | : 3.75 % | Approx. weight³ | : 9.1 kg |
| Rated torque | : 0.105 kgfm | | |
| Locked rotor torque | : 190 % | | |
| Breakdown torque | : 290 % | | |
| Insulation class | : B | | |
| Service factor | : 1.60 | | |
| Moment of inertia (J) | : 0.0080 kgm² | | |

| Output | 50% | 75% | 100% |
|---|---|---|---|
| Efficiency (%) | 44.8 | 53.5 | 58.0 |
| Power Factor | 0.47 | 0.55 | 0.63 |

Foundation loads

| | |
|---|---|
| Max. traction | : 5 kgf |
| Max. compression | : 14 kgf |

| | | Drive end | Non drive end |
|---|---|---|---|
| Bearing type | : | 6203 2RS | 6202 2RS |
| Sealing | : | Slinger | Without Bearing Seal |
| Lubrication interval | : | - | - |
| Lubricant amount | : | - | - |
| Lubricant type | : | Mobil Polyrex EM | |

Notes

This revision replaces and cancel the previous one, which must be eliminated.
(1) Looking the motor from the shaft end.
(2) Measured at 1m and with tolerance of +3dB(A).
(3) Approximate weight subject to changes after manufacturing process.
(4) At 100% of full load.

These are average values based on tests with sinusoidal power supply, subject to the tolerances stipulated in NEMA MG-1.

| Rev. | Changes Summary | Performed | Checked | Date |
|---|---|---|---|---|
| | | | | |

| | | | | |
|---|---|---|---|---|
| Performed by | | | | |
| Checked by | | | Page | Revision |
| Date | 24/10/2024 | | 1 / 2 | |

This document is exclusive property of WEG S/A. Reprinting is not allowed without written authorization of WEG S/A.
Subject to change without notice

# LOAD PERFORMANCE CURVE

## Single Phase Induction Motor - Squirrel Cage

| | | | |
|---|---|---|---|
| Customer | : | | |
| Product line | : Wjet Pump Single-Phase Start Capacitor | Product code : | 10597689 |

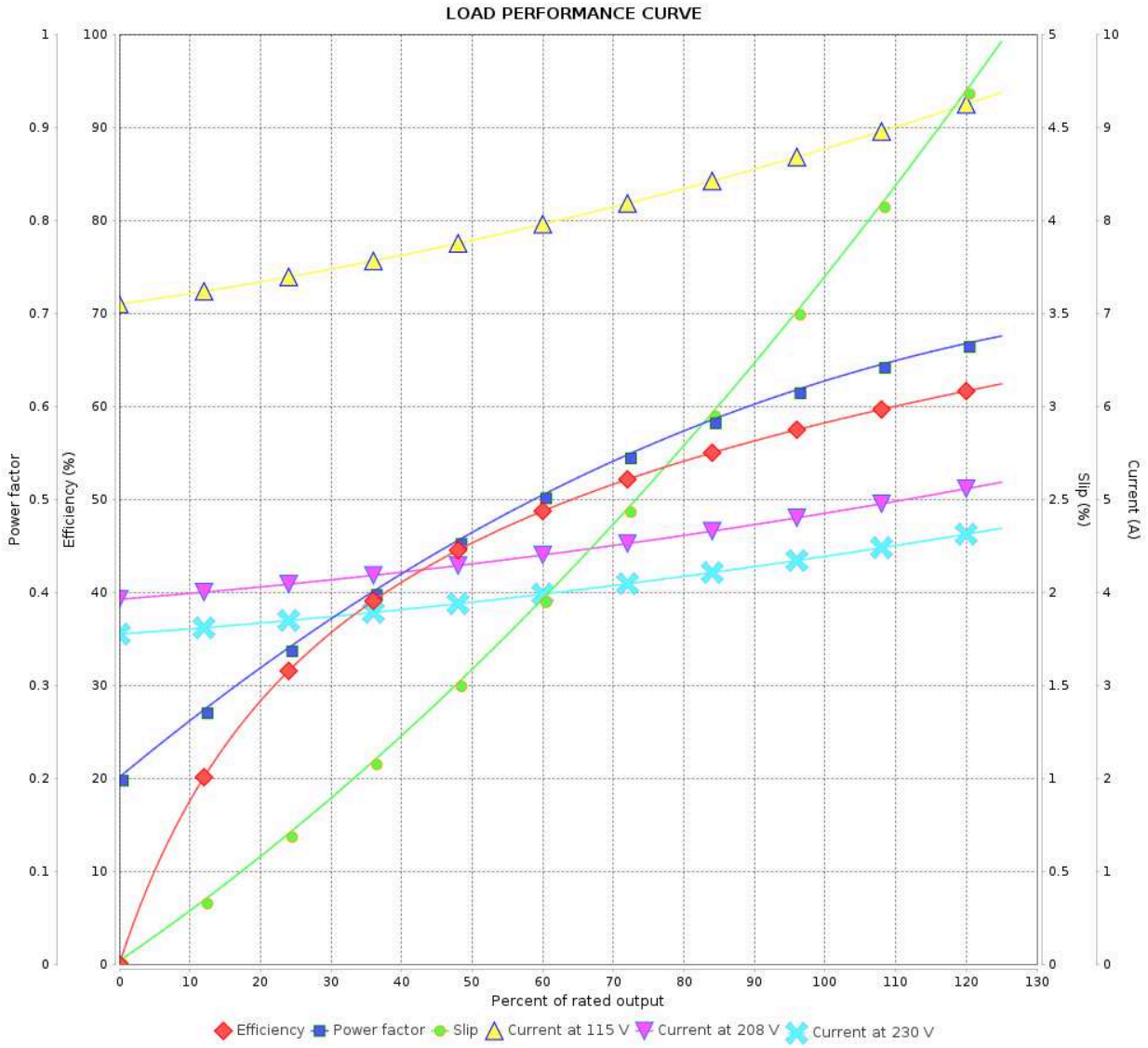


| | | | |
|---|---|---|---|
| Performance | : 115/208-230 V 60 Hz 2P | | |
| Rated current | : 9.30/3.90-4.65 A | Moment of inertia (J) | : 0.0080 kgm² |
| LRC | : 4.6 | Duty cycle | : Cont.(S1) |
| Rated torque | : 0.105 kgfm | Insulation class | : B |
| Locked rotor torque | : 190 % | Service factor | : |
| Breakdown torque | : 290 % | Temperature rise | : 80 K |
| Rated speed | : 3465 rpm | | |

| Rev. | Changes Summary | Performed | Checked | Date |
|---|---|---|---|---|
| | | | | |

| | | | | |
|---|---|---|---|---|
| Performed by | | | | |
| Checked by | | | Page | Revision |
| Date | 24/10/2024 | | 2 / 2 | |

This document is exclusive property of WEG S/A. Reprinting is not allowed without written authorization of WEG S/A.
Subject to change without notice

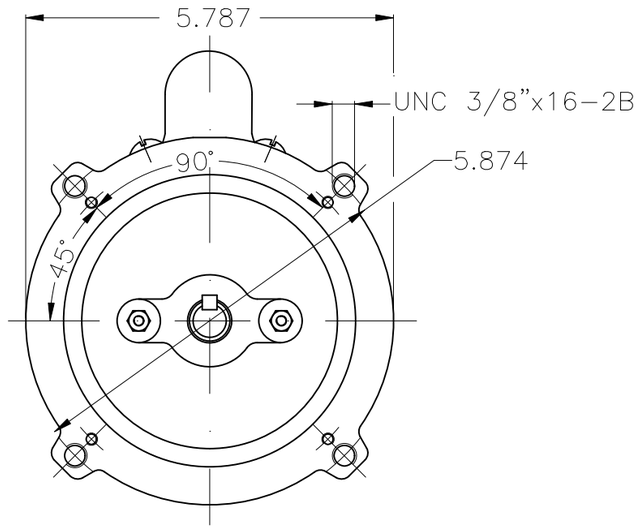


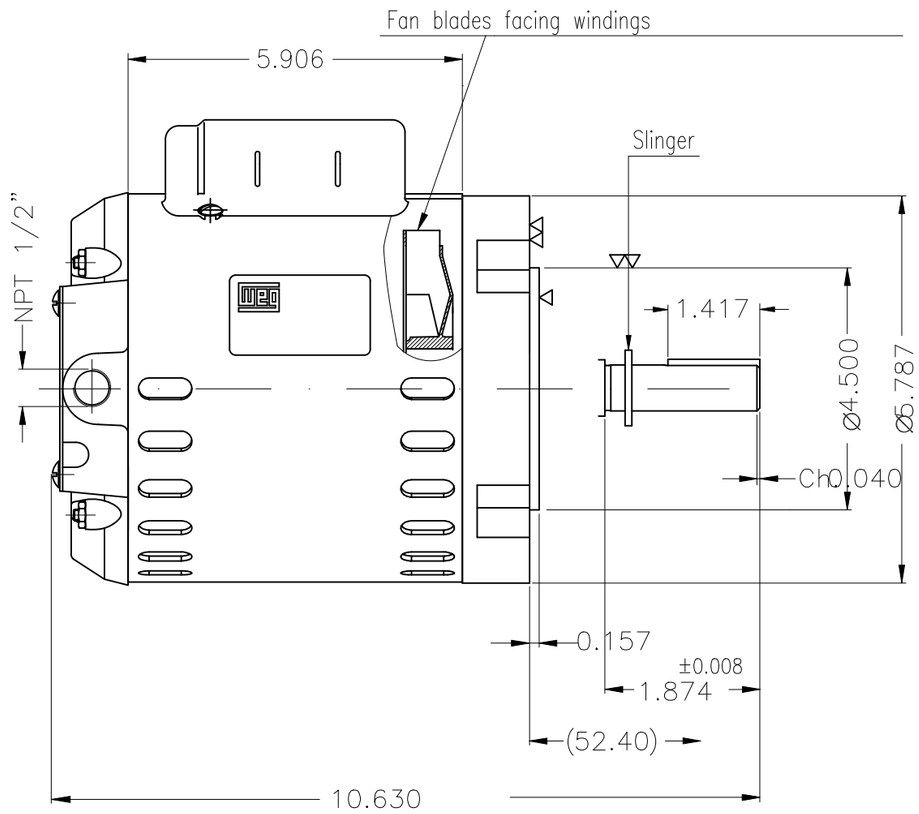


Mounting NEMA F-1

Mounting B14R(D)

| ECM | LOC | SUMMARY OF MODIFICATIONS | EXECUTED | CHECKED | RELEASED | DATE | VER |
|---|---|---|---|---|---|---|---|
| | | | HYBRISUSER | | | | 00 |

| | | | | |
|---|---|---|---|---|
| EXECUTED | HYBRISUSER | SINGLE PH. MOTOR WJET PUMP | PREVIEW | |
| CHECKED | | FRAME W56C IP21 ODP | WDD 00 | |
| RELEASED | | | | |
| REL. DATE | | WMO Jaragua do Sul Product Engineering | SHEET 1 / 1 | |

1/2 HP 02 Poles 60 Hz

A

Dimensions in inches

XME A3

WEG's property. Forbidden reproduction without previous authorization.