DATA SHEET

Three Phase Induction Motor - Squirrel Cage

Customer	:

Product line	: W22 - Nema Premium Efficiency
Product code	: 11611502

Frame	: 404/5T	Cooling method	: IC411 - TEFC
Insulation class	: F	Mounting	: B3R(D)
Duty cycle	: S1	Rotation	: Both
Ambient temperature	: -20 °C to +40 °C	Starting method	: Direct On Line
Altitude	: 1000 m	Approx. weight	: 517 kg
Protection degree	: IP55	Moment of inertia (J)	: 1.26 kgm²
Design	: B		

Output		100 HP (75	75 HP (55 kW)	75 HP (55 kW)	75 HP (55 kW)	100 HP (75	100 HP (75	100 HP (75
Poles		4	4	4	4	4	4	4
Frequency		60 Hz	50 Hz	50 Hz	50 Hz	50 Hz	50 Hz	50 Hz
Rated voltage		230/460 V	380 V	400 V	415 V	380 V	400 V	415 V
Rated current		226/113 A	102 A	98.3 A	95.9 A	138 A	131 A	127 A
L. R. Amperes		1650/825 A	785 A	826 A	854 A	814 A	852 A	902 A
LRC		7.3 Code H	7.7 Code H	8.4 Code J	8.9 Code K	5.9 Code F	6.5 Code G	7.1 Code H
No load current		76.0/38.0 A	37.6 A	40.1 A	42.0 A	37.6 A	40.1 A	42.0 A
Rated speed		1780 rpm	1485 rpm	1485 rpm	1485 rpm	1470 rpm	1475 rpm	1475 rpm
Slip		1.11 %	1.00 %	1.00 %	1.00 %	2.00 %	1.67 %	1.67 %
Rated torque		40.8 kgfm	36.7 kgfm	36.7 kgfm	36.7 kgfm	49.4 kgfm	49.2 kgfm	49.2 kgfm
Locked rotor torque		240 %	260 %	280 %	290 %	190 %	210 %	220 %
Breakdown torque		260 %	280 %	310 %	330 %	210 %	230 %	250 %
Service factor		1.25	1.00	1.00	1.00	1.00	1.00	1.00
Temperature rise		80 K	80 K	80 K	80 K	105 K	105 K	105 K
Noise level		68 dB(A)	64 dB(A)	64 dB(A)	64 dB(A)	64 dB(A)	64 dB(A)	64 dB(A)
Locked rotor time		13 s (hot) 23 s (cold)	9 s (hot) 16 s (cold)	9 s (hot) 16 s (cold)	9 s (hot) 16 s (cold)	9 s (hot) 16 s (cold)	9 s (hot) 16 s (cold)	9 s (hot) 16 s (cold)
Efficiency (%)	50%	95.0	94.0	93.9	93.6	94.5	94.5	94.5
	75%	95.0	94.4	94.5	94.5	94.1	94.5	94.5
	100%	95.4	95.0	95.0	95.0	93.6	94.1	94.5
Power Factor	Start	0.43	0.43	0.43	0.43	0.43	0.43	0.43
	50%	0.77	0.72	0.69	0.66	0.82	0.79	0.77
	75%	0.84	0.83	0.81	0.79	0.86	0.85	0.84
	100%	0.87	0.86	0.85	0.84	0.88	0.88	0.87
Losses at normative operating points (speed;torque), in percentage of rated output power								
P1 (0,9;1,0)		4.67	4.67	4.67	4.67	4.67	4.67	4.67
P2 (0,5;1,0)		3.85	3.85	3.85	3.85	3.85	3.85	3.85
P3 (0,25;1,0)		3.66	3.66	3.66	3.66	3.66	3.66	3.66
P4 (0,9;0,5)		2.20	2.20	2.20	2.20	2.20	2.20	2.20
P5 (0,5;0,5)		1.47	1.47	1.47	1.47	1.47	1.47	1.47
P6 (0,5;0,25)		0.92	0.92	0.92	0.92	0.92	0.92	0.92
P7 (0,25;0,25)		0.60	0.60	0.60	0.60	0.60	0.60	0.60

	Drive end	Non drive end
Bearing type	NU-316-C3	6314-C3
Lubrication interval	7000 h	12000 h
Lubricant amount	34 g	27 g
Lubricant type	MOBIL POLYREX EM	

Foundation loads
Max. traction : 936 kgf
Max. compression : 1453 kgf

Notes:
The vibration and noise level informed are valid when motor is operating with roller bearings respecting their minimum radial load.
Thus, WEG reserves the right to test the motor with ball bearings.

Rev.	Changes Summary	Performed	Checked	Date
				2026/11/27

Performed by				
Checked by			Page	Revision
Date	2026/11/27		1/8	0

This document is exclusive property of WEG S/A. Reprinting is not allowed without written authorization of WEG S/A.

LOAD PERFORMANCE CURVE

Three Phase Induction Motor - Squirrel Cage

Customer	:
Product line	: W22 - Nema Premium Efficiency
Product code	: 11611502

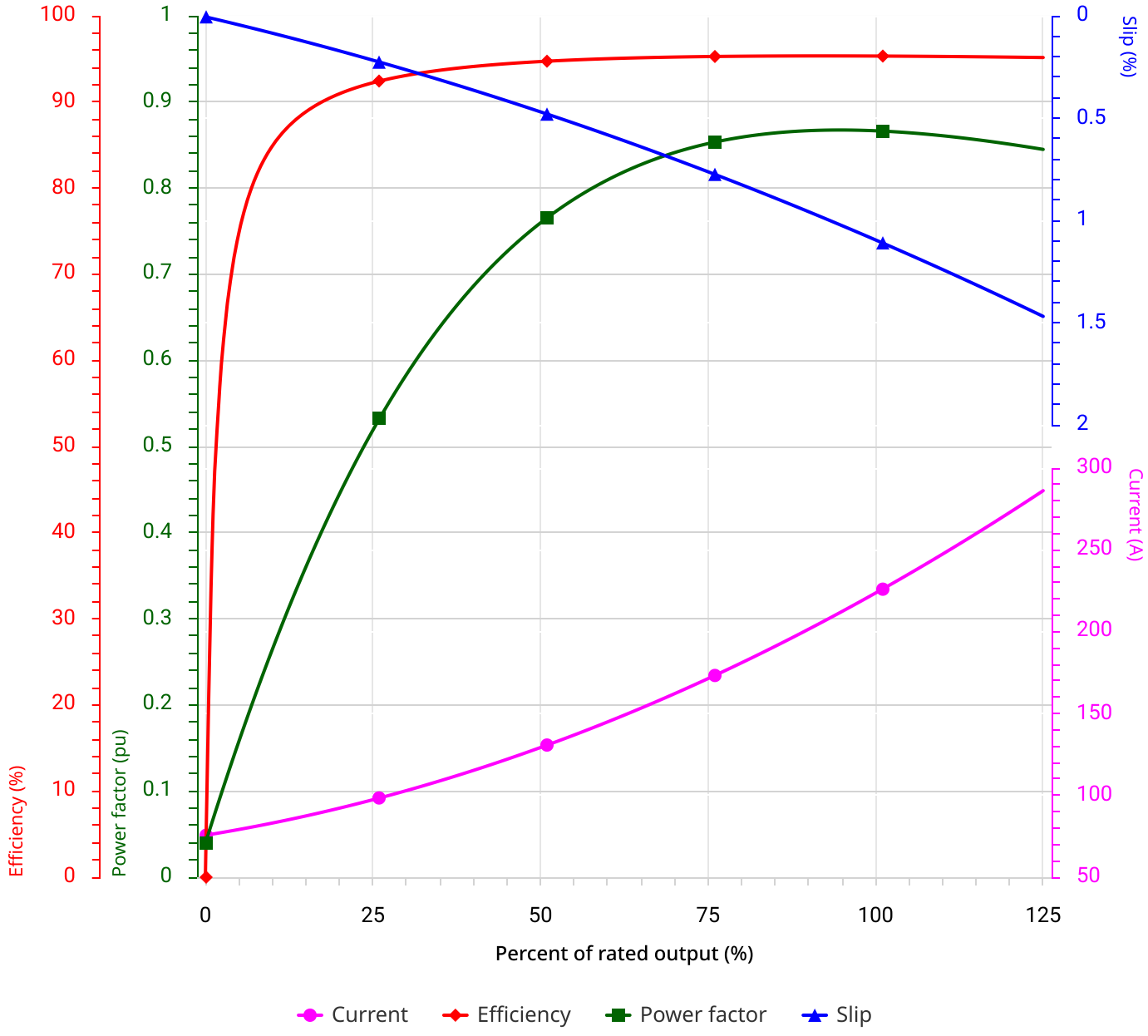

Performance	: 100 HP (75 kW) 230/460V 60Hz 4P 404/5T

Rated current	: 226/113 A	Moment of inertia (J)	: 1.26 kgm²
LRC	: 7.3 Code H	Duty cycle	: Cont.(S1)
Rated torque	: 40.8 kgfm	Insulation class	: F
Locked rotor torque	: 240 %	Service factor	: 1.25
Breakdown torque	: 260 %	Temperature rise	: 80 K
Rated speed	: 1780 rpm	Design	: B

Rev.	Changes Summary	Performed	Checked	Date
				2026/11/27

Performed by				
Checked by			Page	Revision
Date	2026/11/27		2/8	0

This document is exclusive property of WEG S/A. Reprinting is not allowed without written authorization of WEG S/A.

LOAD PERFORMANCE CURVE

Three Phase Induction Motor - Squirrel Cage

Customer	:
Product line	: W22 - Nema Premium Efficiency
Product code	: 11611502

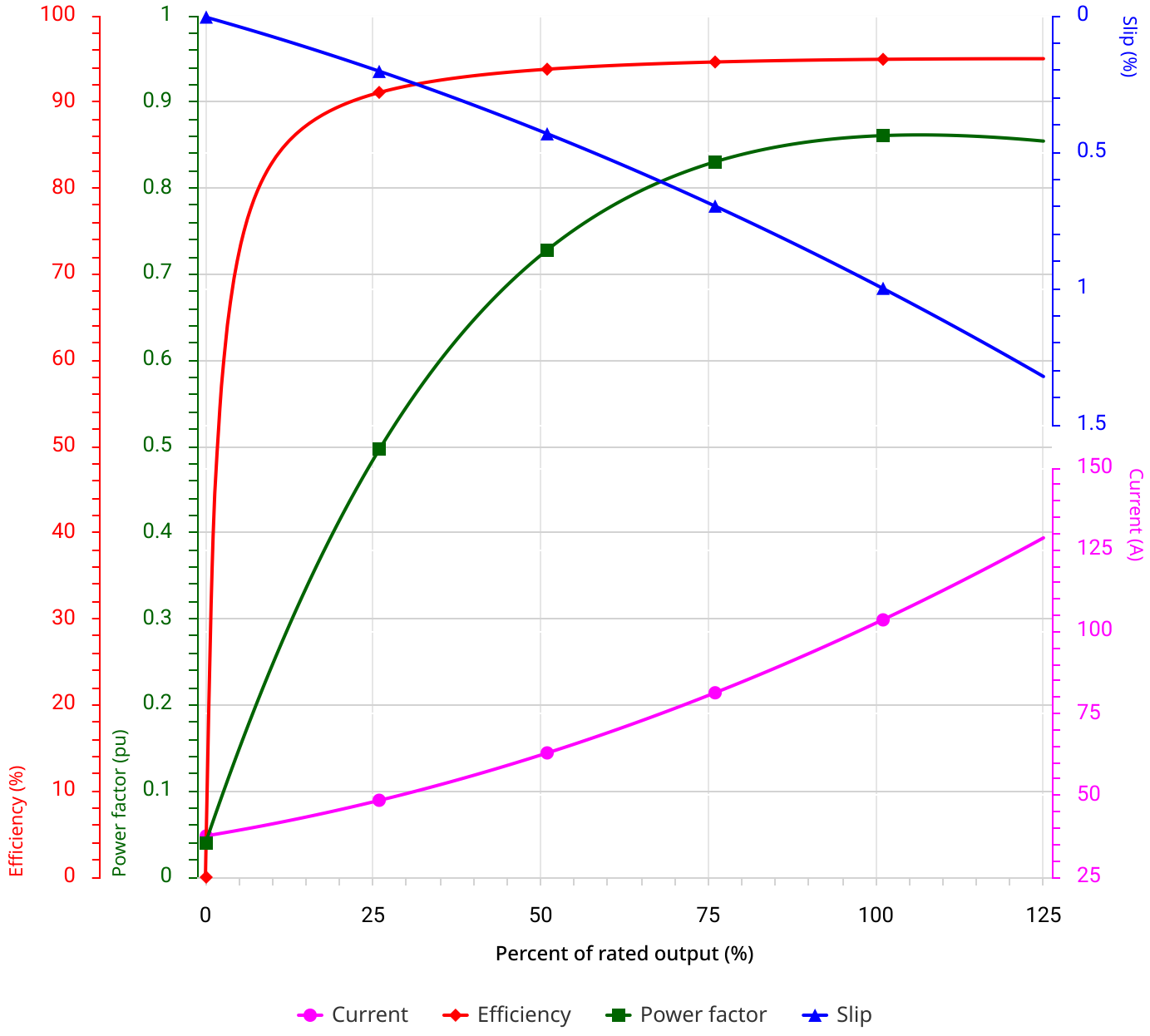

Performance	: 75 HP (55 kW) 380V 50Hz 4P 404/5T

Rated current	: 102 A	Moment of inertia (J)	: 1.26 kgm²
LRC	: 7.7 Code H	Duty cycle	: Cont.(S1)
Rated torque	: 36.7 kgfm	Insulation class	: F
Locked rotor torque	: 260 %	Service factor	: 1.00
Breakdown torque	: 280 %	Temperature rise	: 80 K
Rated speed	: 1485 rpm	Design	: B

Rev.	Changes Summary	Performed	Checked	Date
				2026/11/27

Performed by				
Checked by			Page	Revision
Date	2026/11/27		3/8	0

This document is exclusive property of WEG S/A. Reprinting is not allowed without written authorization of WEG S/A.

LOAD PERFORMANCE CURVE

Three Phase Induction Motor - Squirrel Cage

Customer	:
Product line	: W22 - Nema Premium Efficiency
Product code	: 11611502

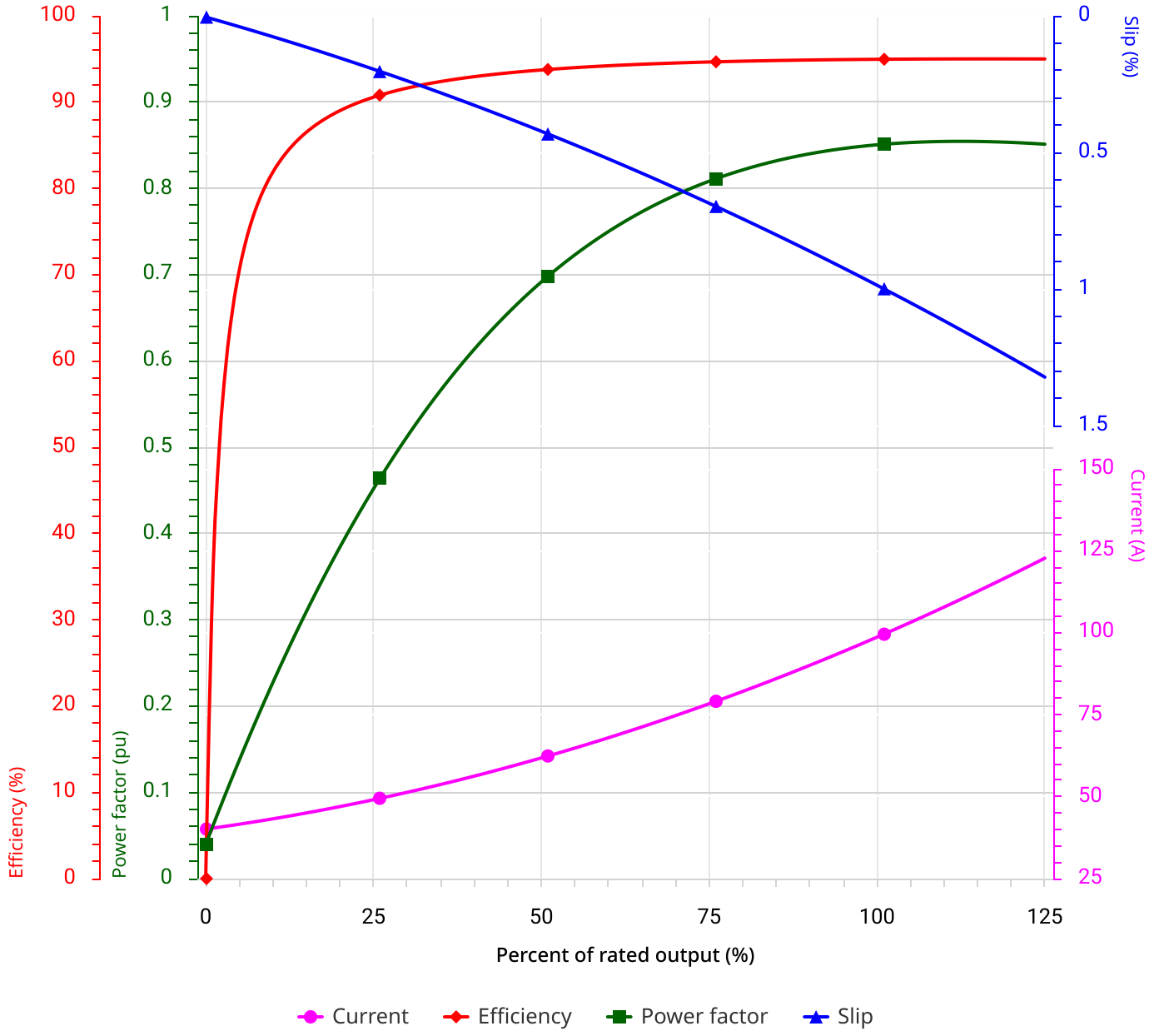

Performance	: 75 HP (55 kW) 400V 50Hz 4P 404/5T

Rated current	: 98.3 A	Moment of inertia (J)	: 1.26 kgm²
LRC	: 8.4 Code J	Duty cycle	: Cont.(S1)
Rated torque	: 36.7 kgfm	Insulation class	: F
Locked rotor torque	: 280 %	Service factor	: 1.00
Breakdown torque	: 310 %	Temperature rise	: 80 K
Rated speed	: 1485 rpm	Design	: B

Rev.	Changes Summary	Performed	Checked	Date
				2026/11/27

Performed by				
Checked by			Page	Revision
Date	2026/11/27		4/8	0

This document is exclusive property of WEG S/A. Reprinting is not allowed without written authorization of WEG S/A.

LOAD PERFORMANCE CURVE

Three Phase Induction Motor - Squirrel Cage

Customer	:
Product line	: W22 - Nema Premium Efficiency
Product code	: 11611502

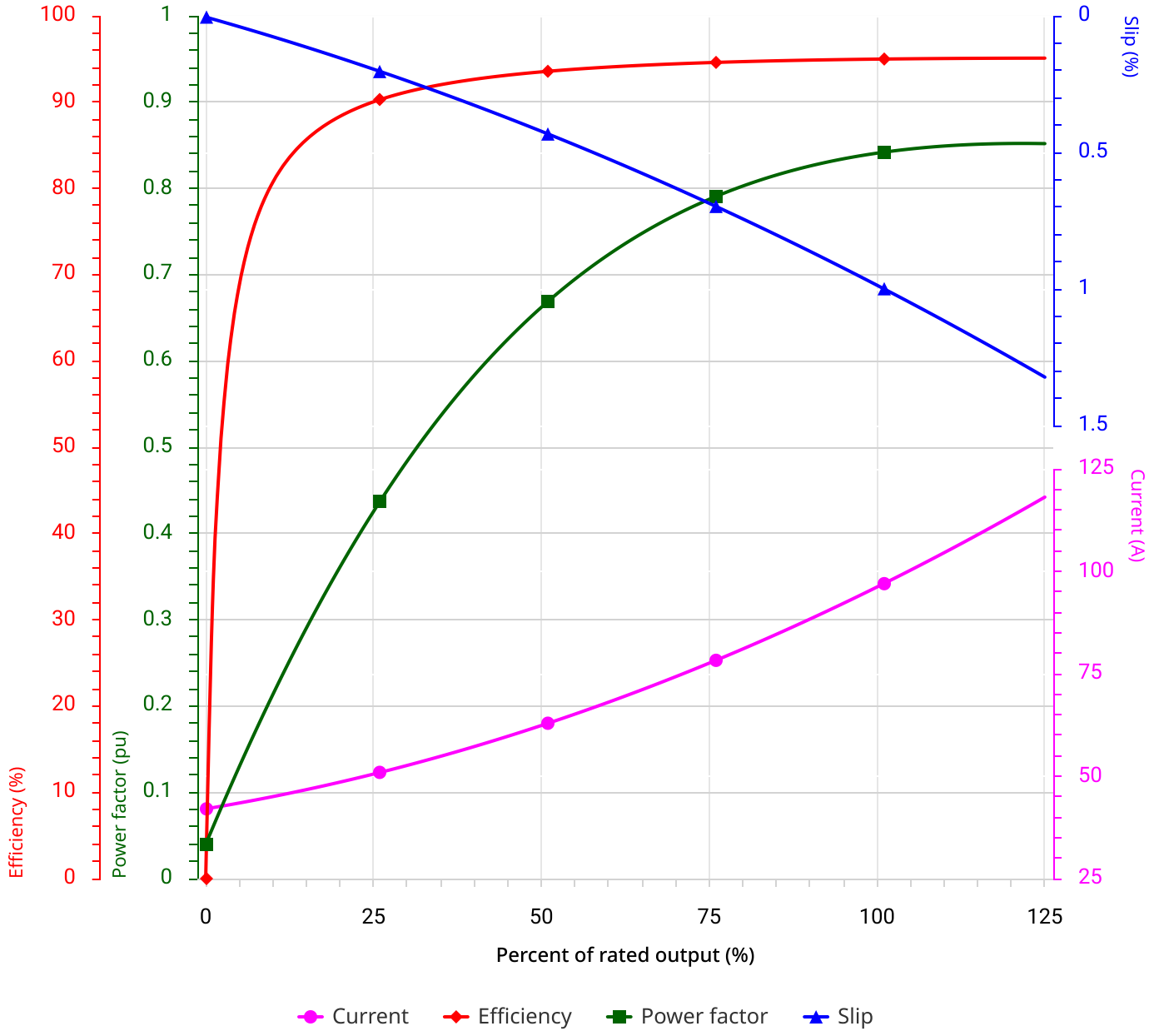

Performance	: 75 HP (55 kW) 415V 50Hz 4P 404/5T

Rated current	: 95.9 A	Moment of inertia (J)	: 1.26 kgm²
LRC	: 8.9 Code K	Duty cycle	: Cont.(S1)
Rated torque	: 36.7 kgfm	Insulation class	: F
Locked rotor torque	: 290 %	Service factor	: 1.00
Breakdown torque	: 330 %	Temperature rise	: 80 K
Rated speed	: 1485 rpm	Design	: B

Rev.	Changes Summary	Performed	Checked	Date
				2026/11/27

Performed by				
Checked by			Page	Revision
Date	2026/11/27		5/8	0

This document is exclusive property of WEG S/A. Reprinting is not allowed without written authorization of WEG S/A.

LOAD PERFORMANCE CURVE

Three Phase Induction Motor - Squirrel Cage

Customer	:
Product line	: W22 - Nema Premium Efficiency
Product code	: 11611502

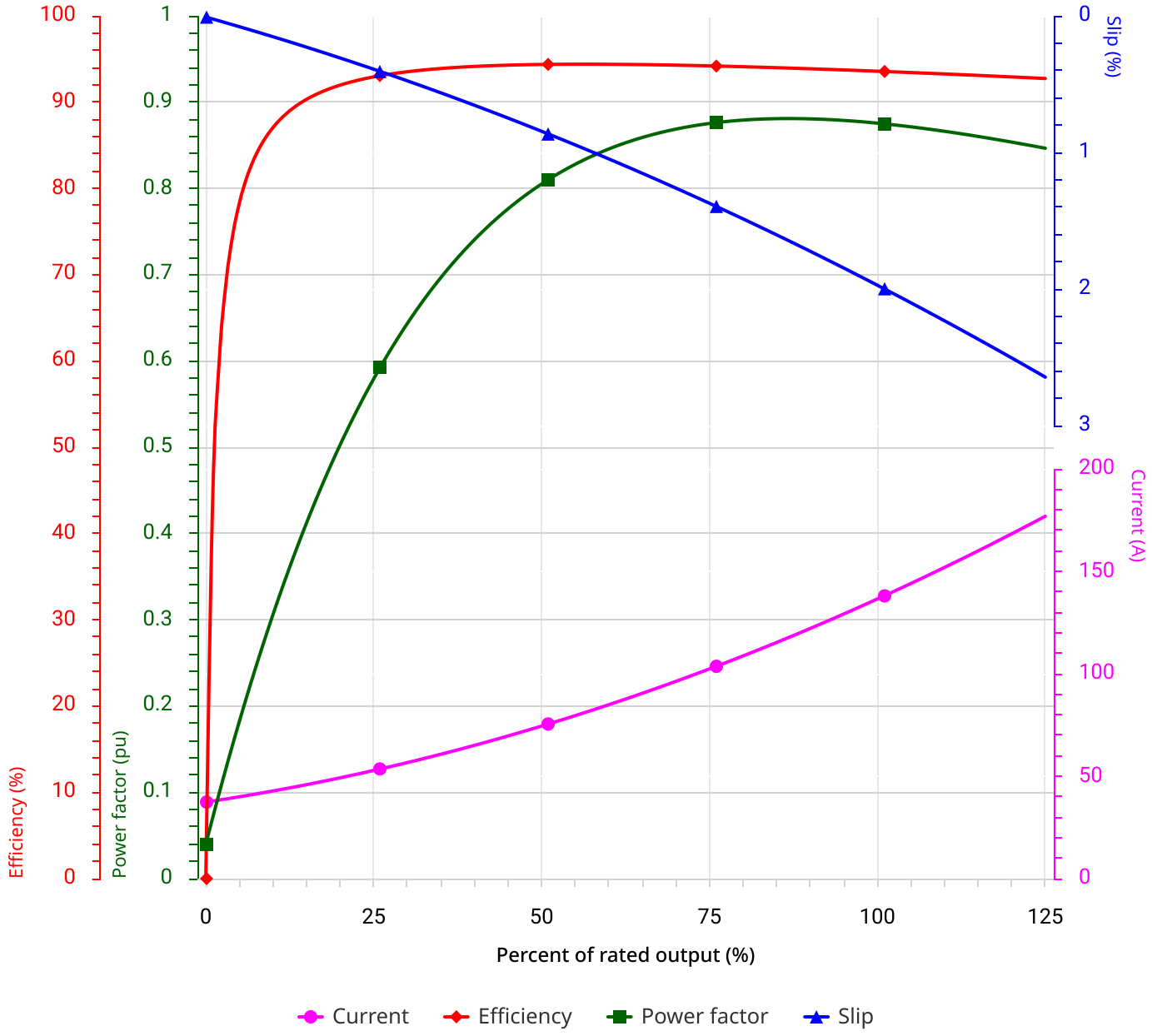

Performance	: 100 HP (75 kW) 380V 50Hz 4P 404/5T

Rated current	: 138 A	Moment of inertia (J)	: 1.26 kgm²
LRC	: 5.9 Code F	Duty cycle	: Cont.(S1)
Rated torque	: 49.4 kgfm	Insulation class	: F
Locked rotor torque	: 190 %	Service factor	: 1.00
Breakdown torque	: 210 %	Temperature rise	: 105 K
Rated speed	: 1470 rpm	Design	: B

Rev.	Changes Summary	Performed	Checked	Date
				2026/11/27

Performed by				
Checked by			Page	Revision
Date	2026/11/27		6/8	0

This document is exclusive property of WEG S/A. Reprinting is not allowed without written authorization of WEG S/A.

LOAD PERFORMANCE CURVE

Three Phase Induction Motor - Squirrel Cage

Customer	:
Product line	: W22 - Nema Premium Efficiency
Product code	: 11611502

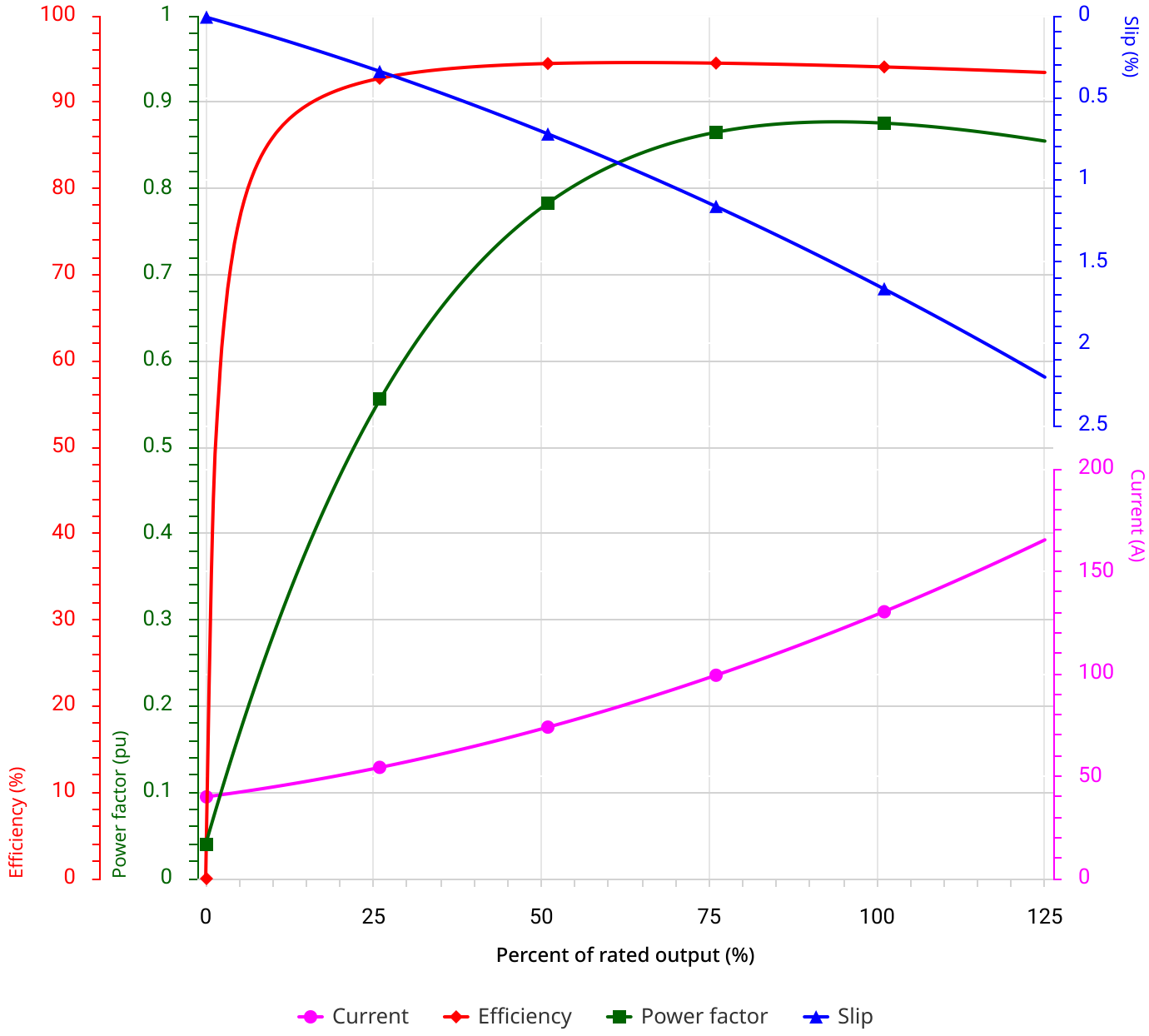

Performance	: 100 HP (75 kW) 400V 50Hz 4P 404/5T

Rated current	: 131 A	Moment of inertia (J)	: 1.26 kgm²
LRC	: 6.5 Code G	Duty cycle	: Cont.(S1)
Rated torque	: 49.2 kgfm	Insulation class	: F
Locked rotor torque	: 210 %	Service factor	: 1.00
Breakdown torque	: 230 %	Temperature rise	: 105 K
Rated speed	: 1475 rpm	Design	: B

Rev.	Changes Summary	Performed	Checked	Date
				2026/11/27

Performed by				
Checked by			Page	Revision
Date	2026/11/27		7/8	0

This document is exclusive property of WEG S/A. Reprinting is not allowed without written authorization of WEG S/A.

LOAD PERFORMANCE CURVE

Three Phase Induction Motor - Squirrel Cage

Customer	:
Product line	: W22 - Nema Premium Efficiency
Product code	: 11611502

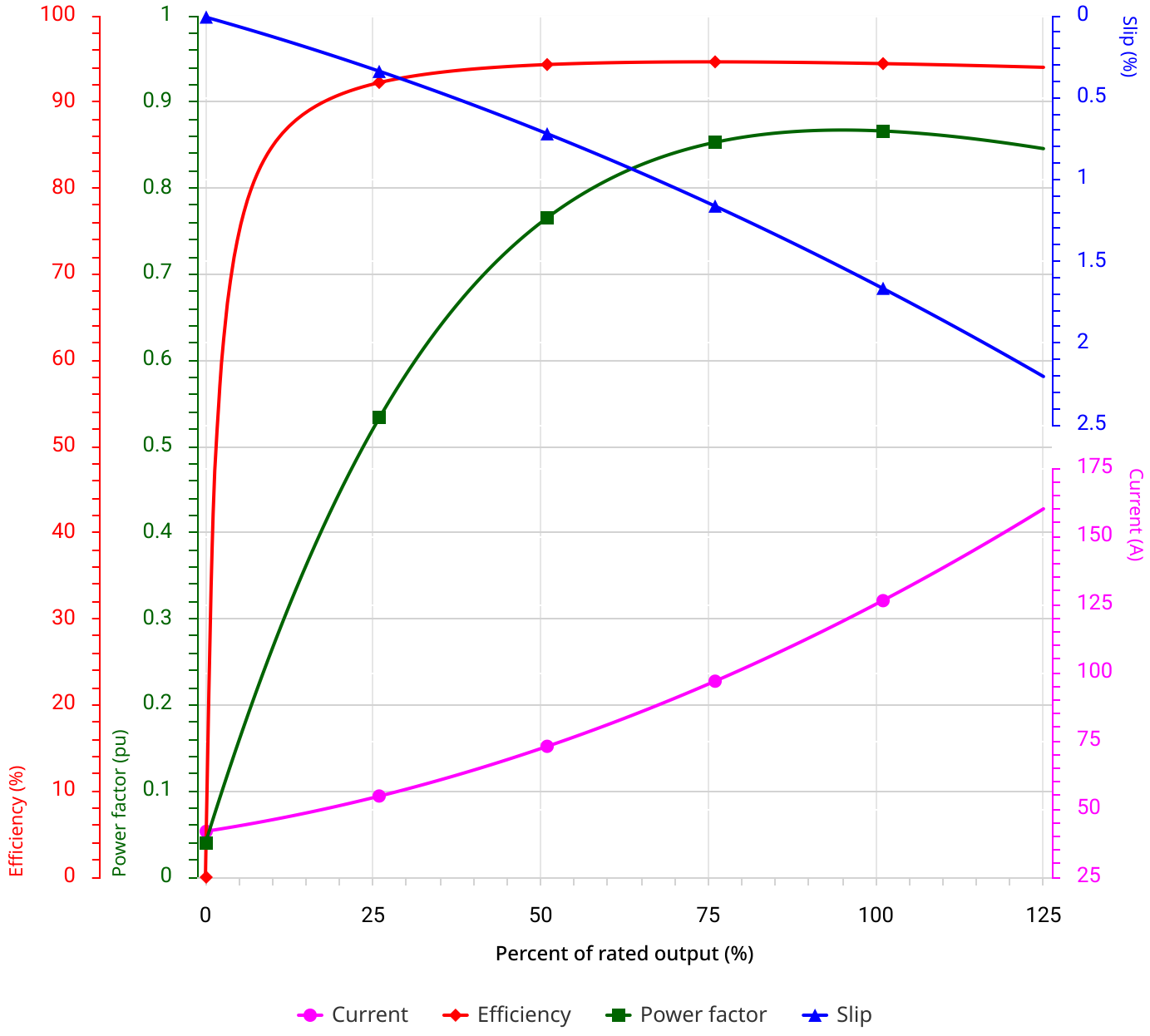

Performance	: 100 HP (75 kW) 415V 50Hz 4P 404/5T

Rated current	: 127 A	Moment of inertia (J)	: 1.26 kgm²
LRC	: 7.1 Code H	Duty cycle	: Cont.(S1)
Rated torque	: 49.2 kgfm	Insulation class	: F
Locked rotor torque	: 220 %	Service factor	: 1.00
Breakdown torque	: 250 %	Temperature rise	: 105 K
Rated speed	: 1475 rpm	Design	: B

Rev.	Changes Summary	Performed	Checked	Date
				2026/11/27

Performed by				
Checked by			Page	Revision
Date	2026/11/27		8/8	0

This document is exclusive property of WEG S/A. Reprinting is not allowed without written authorization of WEG S/A.

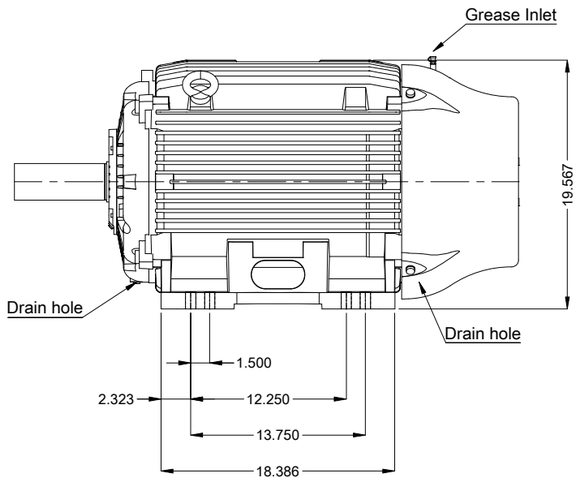

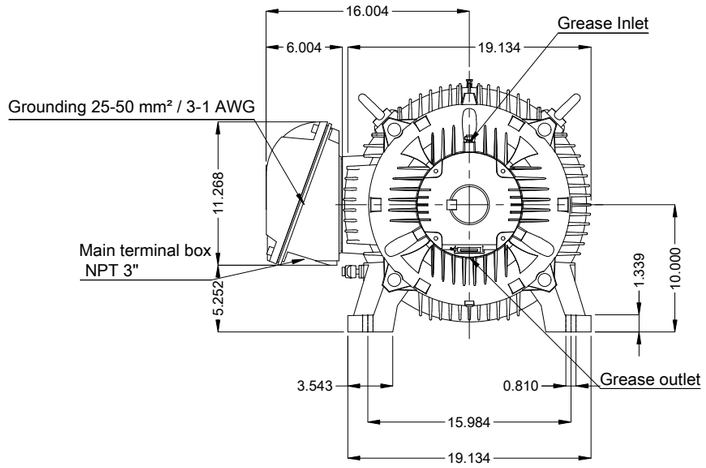

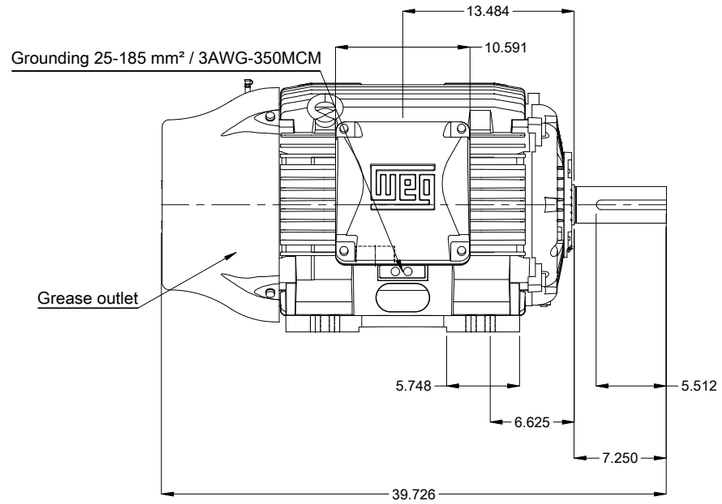

Without vertical jackscrews
Shaft locking device
DE roller bearing
Color RAL 5009
Painting plan 203A
Mounting B3R(D)

DE Shaft End

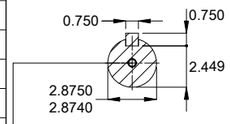

DUNC 3/4"-10 WEG WPR-7339

100 HP 04 Poles 60 Hz | A

Scale 1 : 12

ECM	LOC	SUMMARY OF MODIFICATIONS	EXECUTED	CHECKED	RELEASED	DATE	VER
			HYBRISUSER				00

EXECUTED	HYBRISUSER
CHECKED	
RELEASED	
REL. DATE	

THREE PH. MOTOR W22 NEMA PREM. EFF.
FRAME 404/5T IP55 TEFC

PREVIEW

WDD 00

SHEET 1 / 1

Dimensions in inches

A3

WEG's property. Forbidden reproduction without previous authorization.