DATA SHEET

Three Phase Induction Motor - Squirrel Cage

Customer :

Product line : ODP NEMA Premium Efficiency Three-Phase

Product code : 11997391

Frame	: 324TC	Cooling method	: IC01 - ODP
Insulation class	: F	Mounting	: F-1
Duty cycle	: Cont.(S1)	Rotation[1]	: Both (CW and CCW)
Ambient temperature	: -20°C to +40°C	Starting method	: Direct On Line
Altitude	: 1000 m.a.s.l.	Approx. weight[3]	: 220 kg
Protection degree	: IP23	Moment of inertia (J)	: 0.2551 kgm²
Design	: B		

Output [HP]		40	30	30	30	40	40	40
Poles		4	4	4	4	4	4	4
Frequency [Hz]		60	50	50	50	50	50	50
Rated voltage [V]		230/460	380	400	415	380	400	415
Rated current [A]		96.4/48.2	42.8	41.6	41.1	58.1	55.8	54.4
L. R. Amperes [A]		598/299	270	291	312	279	301	321
LRC [A]		6.2x(Code G)	6.3x(Code G)	7.0x(Code H)	7.6x(Code J)	4.8x(Code E)	5.4x(Code F)	5.9x(Code G)
No load current [A]		37.0/18.5	15.4	16.8	18.1	15.4	16.8	18.1
Rated speed [RPM]		1775	1475	1475	1480	1465	1470	1475
Slip [%]		1.39	1.67	1.67	1.33	2.33	2.00	1.67
Rated torque [kgfm]		16.4	14.8	14.8	14.7	19.8	19.7	19.7
Locked rotor torque [%]		220	240	270	290	180	200	220
Breakdown torque [%]		229	340	370	400	250	280	300
Service factor		1.15	1.15	1.15	1.15	1.15	1.15	1.15
Temperature rise		80 K	80 K	80 K	80 K	80 K	80 K	80 K
Locked rotor time		50s (cold) 28s (hot)	36s (cold) 20s (hot)	32s (cold) 18s (hot)	30s (cold) 17s (hot)	36s (cold) 20s (hot)	32s (cold) 18s (hot)	30s (cold) 17s (hot)
Noise level[2]		64.0 dB(A)						
Efficiency (%)	25%							
	50%	93.6	90.1	89.9	89.8	91.7	91.7	91.7
	75%	94.1	91.7	91.7	92.0	91.7	91.7	92.4
	100%	94.1	93.0	93.0	93.0	92.3	92.3	92.4
Power Factor	25%							
	50%	0.68	0.70	0.66	0.63	0.77	0.74	0.71
	75%	0.78	0.80	0.77	0.74	0.84	0.82	0.80
	100%	0.83	0.84	0.82	0.80	0.85	0.84	0.83

		Drive end	Non drive end
Bearing type	:	6312 Z C3	6212 Z C3
Sealing	:	Without Bearing Seal	Without Bearing Seal
Lubrication interval	:	20000 h	20000 h
Lubricant amount	:	21 g	13 g
Lubricant type	:	Mobil Polyrex EM	

Foundation loads

Max. traction : 634 kgf

Max. compression : 852 kgf

Notes

USABLE @208V 107A SF 1.15 SFA 123A

This revision replaces and cancel the previous one, which must be eliminated.

(1) Looking the motor from the shaft end.

(2) Measured at 1m and with tolerance of +3dB(A).

(3) Approximate weight subject to changes after manufacturing process.

(4) At 100% of full load.

These are average values based on tests with sinusoidal power supply, subject to the tolerances stipulated in NEMA MG-1.

Rev.	Changes Summary	Performed	Checked	Date

Performed by				
Checked by			Page	Revision
Date	09/07/2026		1 / 8	

This document is exclusive property of WEG S/A. Reprinting is not allowed without written authorization of WEG S/A.
Subject to change without notice

LOAD PERFORMANCE CURVE

Three Phase Induction Motor - Squirrel Cage

Customer	:

Product line	: ODP NEMA Premium Efficiency Three-Phase	Product code :	11997391

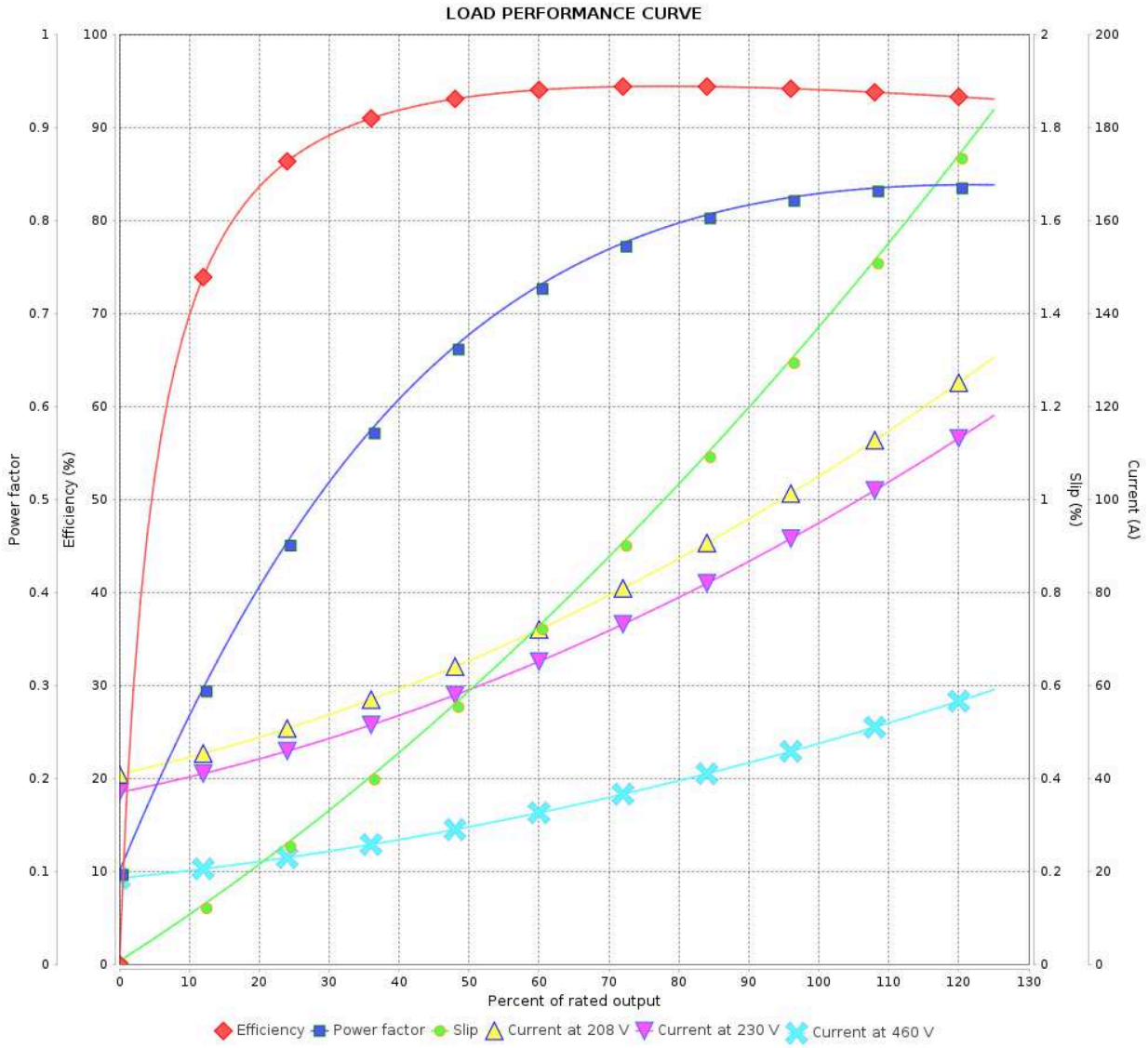

Performance	: 230/460 V 60 Hz 4P

Rated current	: 96.4/48.2 A	Moment of inertia (J)	: 0.2551 kgm²
LRC	: 6.2	Duty cycle	: Cont.(S1)
Rated torque	: 16.4 kgfm	Insulation class	: F
Locked rotor torque	: 220 %	Service factor	: 1.15
Breakdown torque	: 229 %	Temperature rise	: 80 K
Rated speed	: 1775 rpm	Design	: B

Rev.	Changes Summary	Performed	Checked	Date

Performed by				
Checked by			Page	Revision
Date	09/07/2026		2 / 8	

This document is exclusive property of WEG S/A. Reprinting is not allowed without written authorization of WEG S/A.
Subject to change without notice

LOAD PERFORMANCE CURVE

Three Phase Induction Motor - Squirrel Cage

Customer :

Product line : ODP NEMA Premium Efficiency Three-Phase

Product code : 11997391

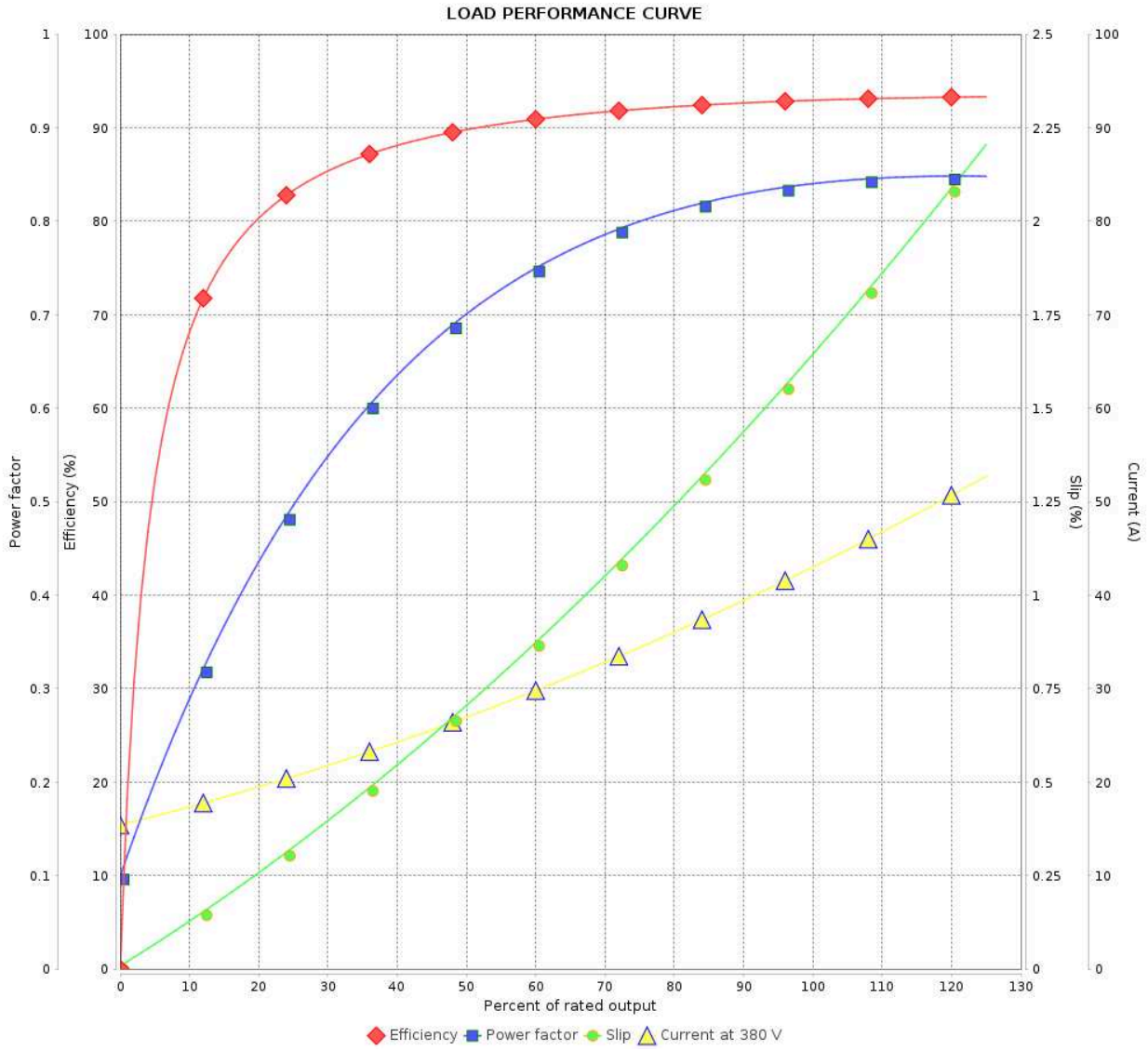

Performance	: 380 V 50 Hz 4P IE3		
Rated current	: 42.8 A	Moment of inertia (J)	: 0.2551 kgm²
LRC	: 6.3	Duty cycle	: Cont.(S1)
Rated torque	: 14.8 kgfm	Insulation class	: F
Locked rotor torque	: 240 %	Service factor	: 1.15
Breakdown torque	: 340 %	Temperature rise	: 80 K
Rated speed	: 1475 rpm	Design	: B

Rev.	Changes Summary	Performed	Checked	Date

Performed by				
Checked by			Page	Revision
Date	09/07/2026		3 / 8	

This document is exclusive property of WEG S/A. Reprinting is not allowed without written authorization of WEG S/A.
Subject to change without notice

LOAD PERFORMANCE CURVE

Three Phase Induction Motor - Squirrel Cage

Customer :

Product line : ODP NEMA Premium Efficiency Three-Phase

Product code : 11997391

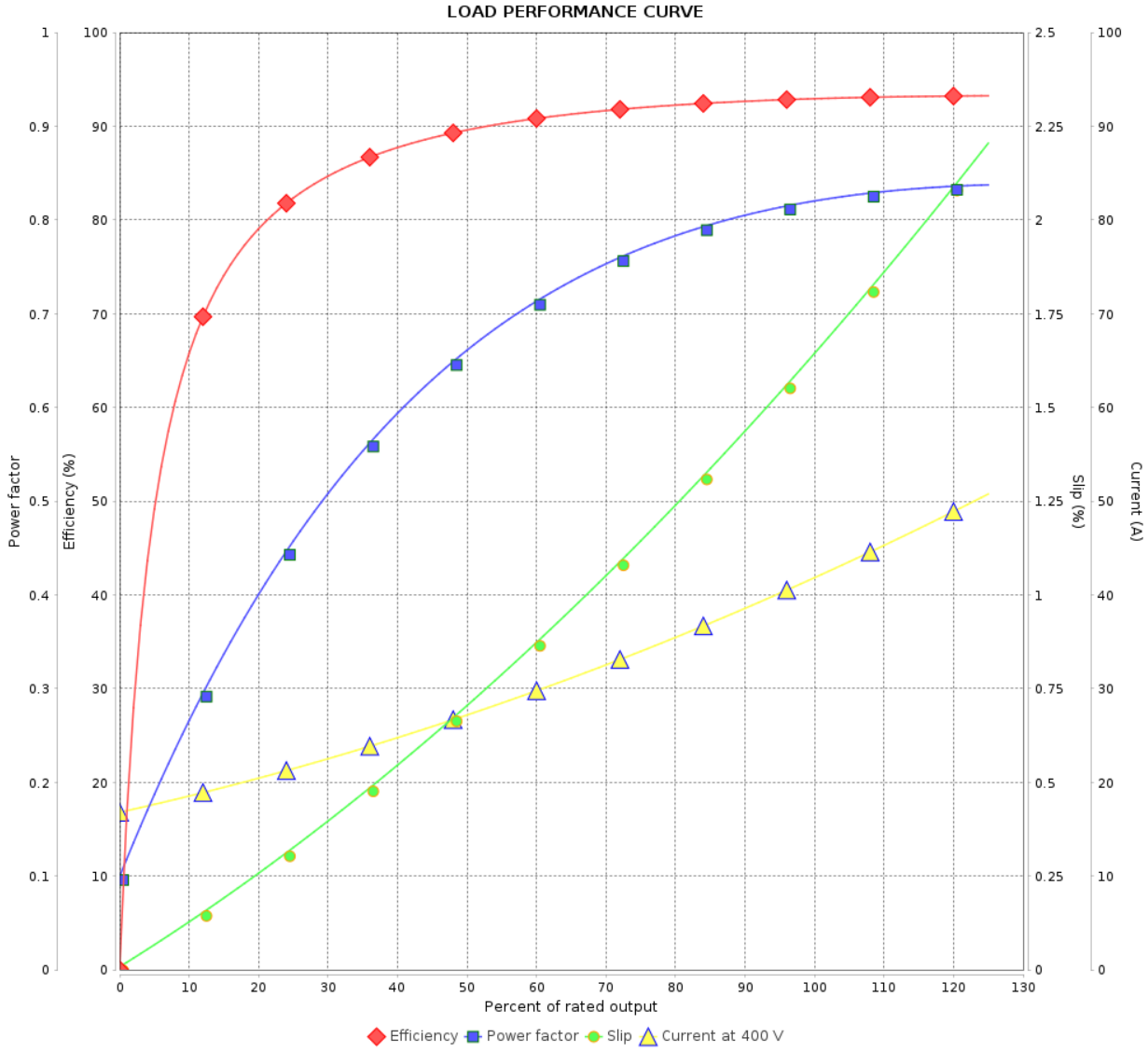

Performance	: 400 V 50 Hz 4P IE3

Rated current	: 41.6 A	Moment of inertia (J)	: 0.2551 kgm²
LRC	: 7.0	Duty cycle	: Cont.(S1)
Rated torque	: 14.8 kgfm	Insulation class	: F
Locked rotor torque	: 270 %	Service factor	: 1.15
Breakdown torque	: 370 %	Temperature rise	: 80 K
Rated speed	: 1475 rpm	Design	: B

Rev.	Changes Summary	Performed	Checked	Date

Performed by				
Checked by			Page	Revision
Date	09/07/2026		4 / 8	

This document is exclusive property of WEG S/A. Reprinting is not allowed without written authorization of WEG S/A.
Subject to change without notice

LOAD PERFORMANCE CURVE

Three Phase Induction Motor - Squirrel Cage

Customer :

Product line : ODP NEMA Premium Efficiency Three-Phase

Product code : 11997391

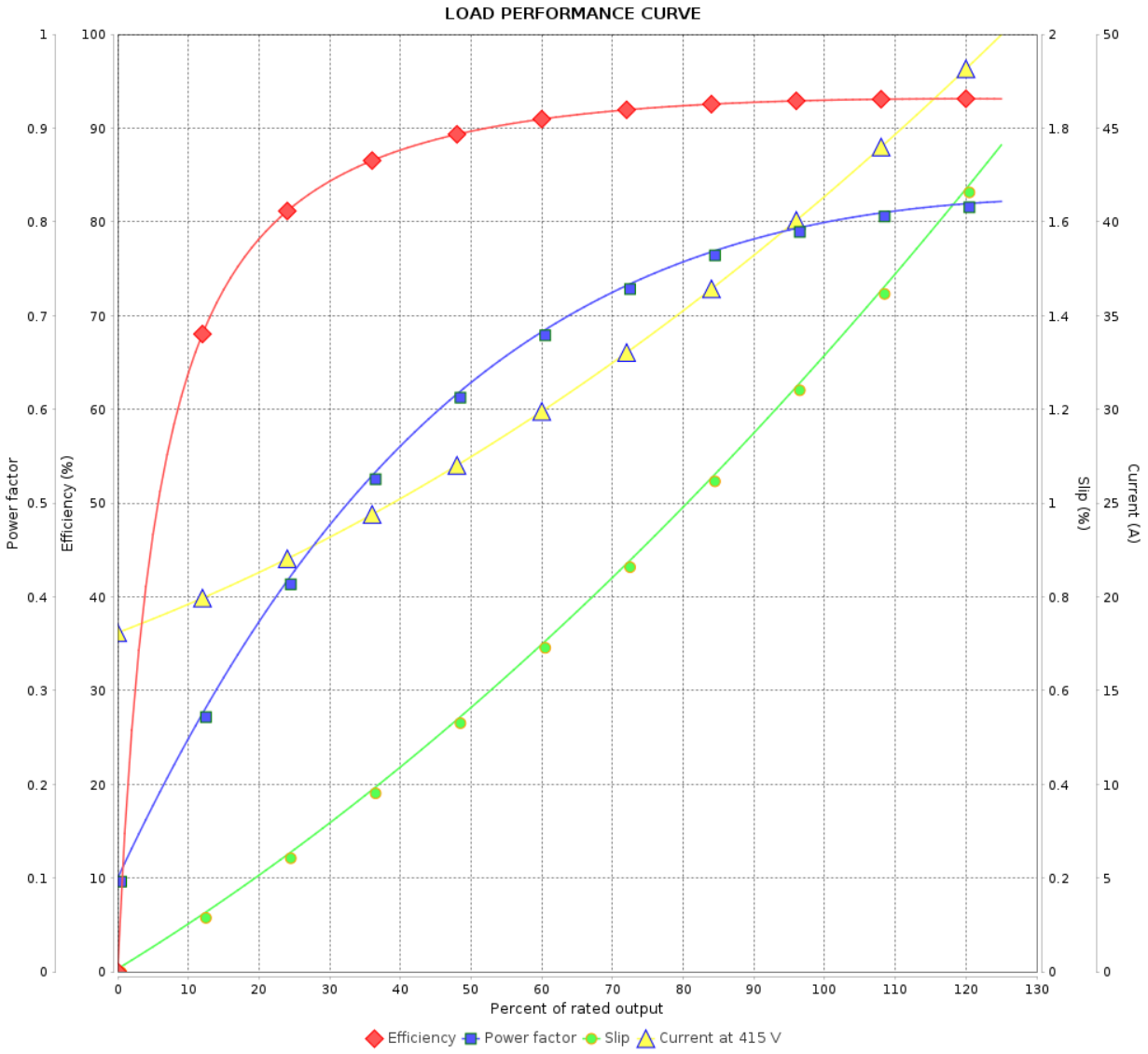

Performance	: 415 V 50 Hz 4P IE3		
Rated current	: 41.1 A	Moment of inertia (J)	: 0.2551 kgm²
LRC	: 7.6	Duty cycle	: Cont.(S1)
Rated torque	: 14.7 kgfm	Insulation class	: F
Locked rotor torque	: 290 %	Service factor	: 1.15
Breakdown torque	: 400 %	Temperature rise	: 80 K
Rated speed	: 1480 rpm	Design	: B

Rev.	Changes Summary	Performed	Checked	Date

Performed by				
Checked by			Page	Revision
Date	09/07/2026		5 / 8	

This document is exclusive property of WEG S/A. Reprinting is not allowed without written authorization of WEG S/A.
Subject to change without notice

LOAD PERFORMANCE CURVE

Three Phase Induction Motor - Squirrel Cage

Customer :

Product line : ODP NEMA Premium Efficiency Three-Phase

Product code : 11997391

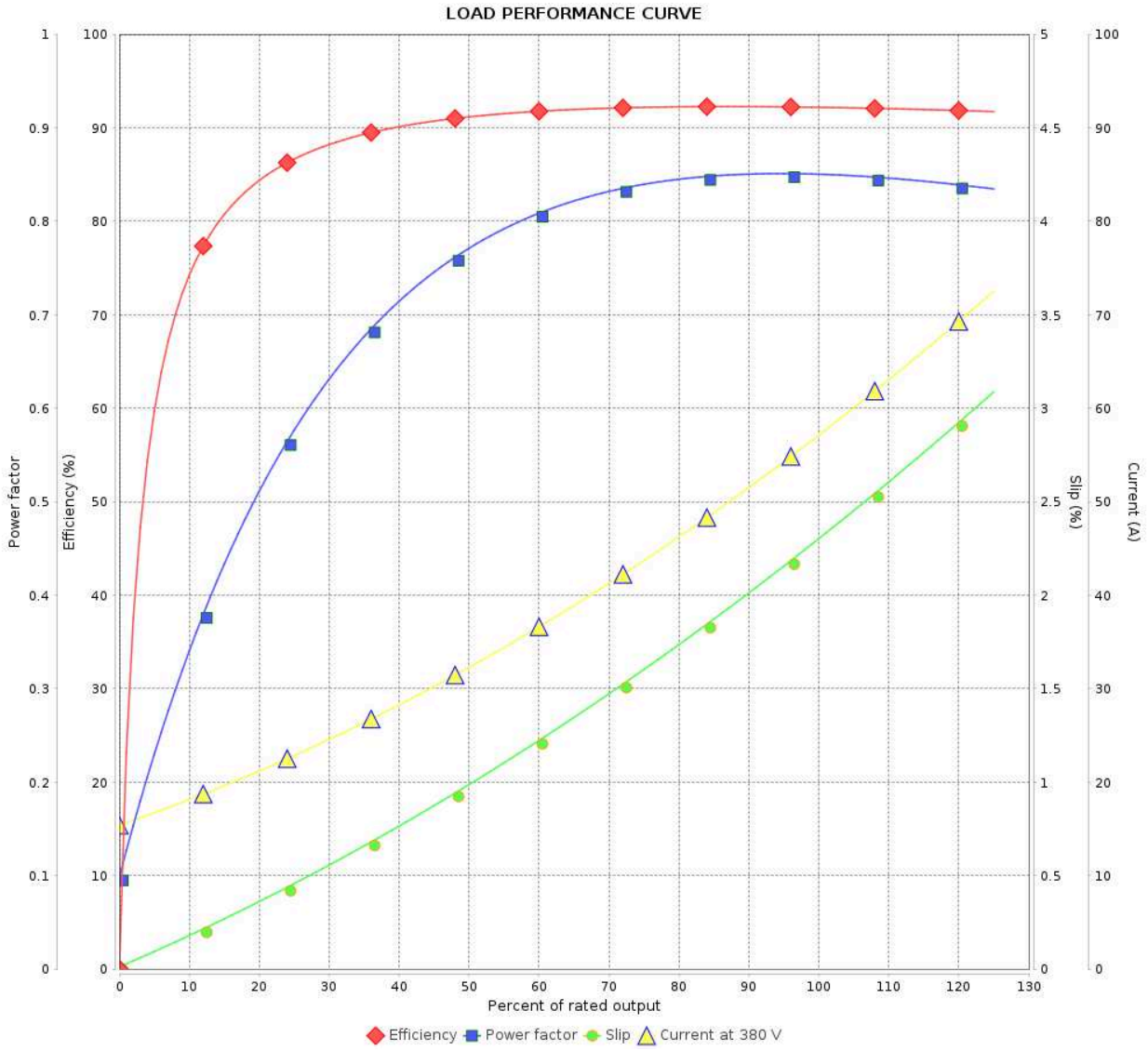

Performance	: 380 V 50 Hz 4P IE2		
Rated current	: 58.1 A	Moment of inertia (J)	: 0.2551 kgm²
LRC	: 4.8	Duty cycle	: Cont.(S1)
Rated torque	: 19.8 kgfm	Insulation class	: F
Locked rotor torque	: 180 %	Service factor	: 1.15
Breakdown torque	: 250 %	Temperature rise	: 80 K
Rated speed	: 1465 rpm	Design	: B

Rev.	Changes Summary	Performed	Checked	Date

Performed by				
Checked by			Page	Revision
Date	09/07/2026		6 / 8	

This document is exclusive property of WEG S/A. Reprinting is not allowed without written authorization of WEG S/A.
Subject to change without notice

LOAD PERFORMANCE CURVE

Three Phase Induction Motor - Squirrel Cage

Customer :

Product line : ODP NEMA Premium Efficiency Three-Phase

Product code : 11997391

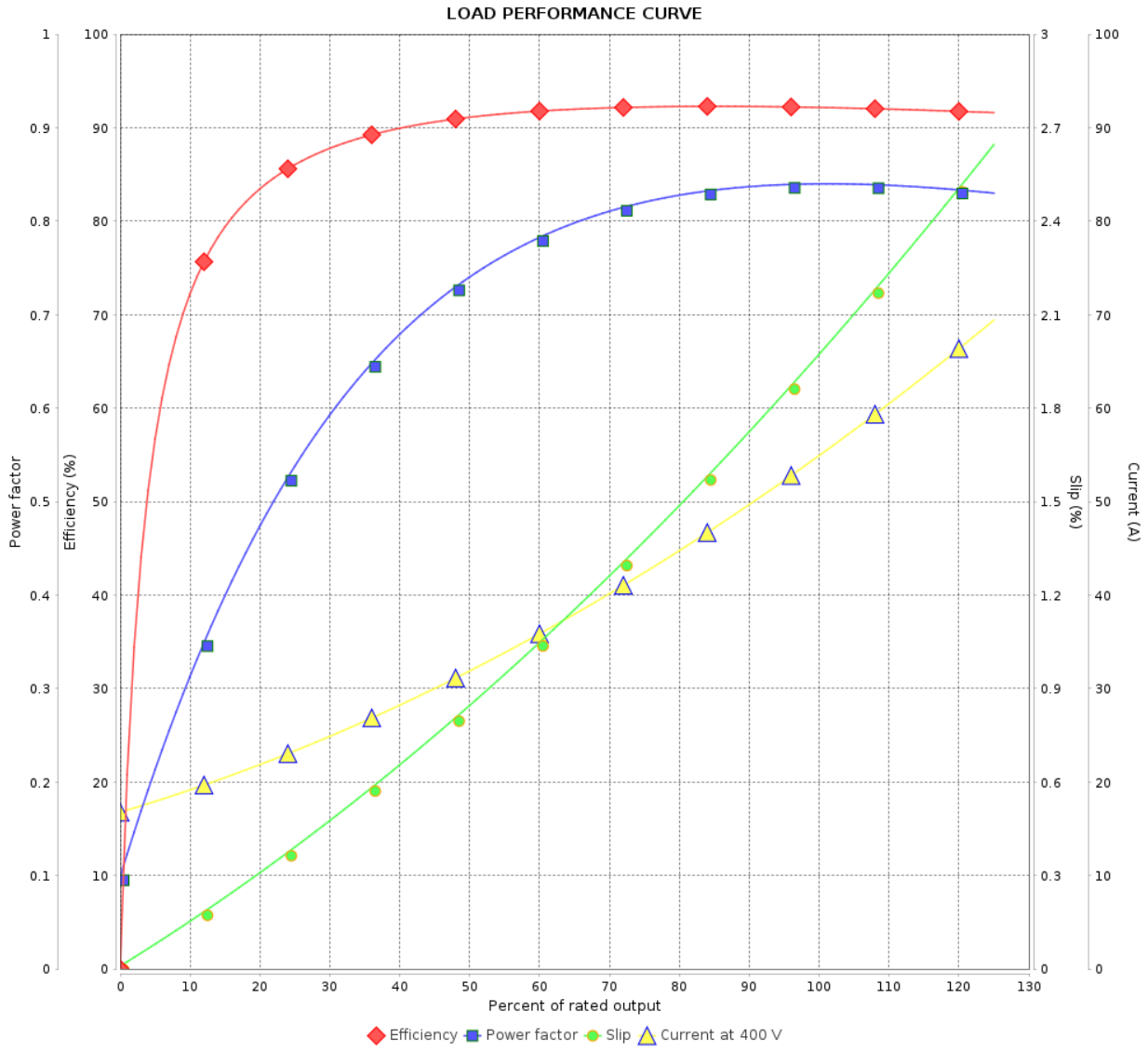

Performance	: 400 V 50 Hz 4P IE2		
Rated current	: 55.8 A	Moment of inertia (J)	: 0.2551 kgm²
LRC	: 5.4	Duty cycle	: Cont.(S1)
Rated torque	: 19.7 kgfm	Insulation class	: F
Locked rotor torque	: 200 %	Service factor	: 1.15
Breakdown torque	: 280 %	Temperature rise	: 80 K
Rated speed	: 1470 rpm	Design	: B

Rev.	Changes Summary	Performed	Checked	Date

Performed by				
Checked by			Page	Revision
Date	09/07/2026		7 / 8	

This document is exclusive property of WEG S/A. Reprinting is not allowed without written authorization of WEG S/A.
Subject to change without notice

LOAD PERFORMANCE CURVE

Three Phase Induction Motor - Squirrel Cage

Customer :

Product line : ODP NEMA Premium Efficiency Three-Phase

Product code : 11997391

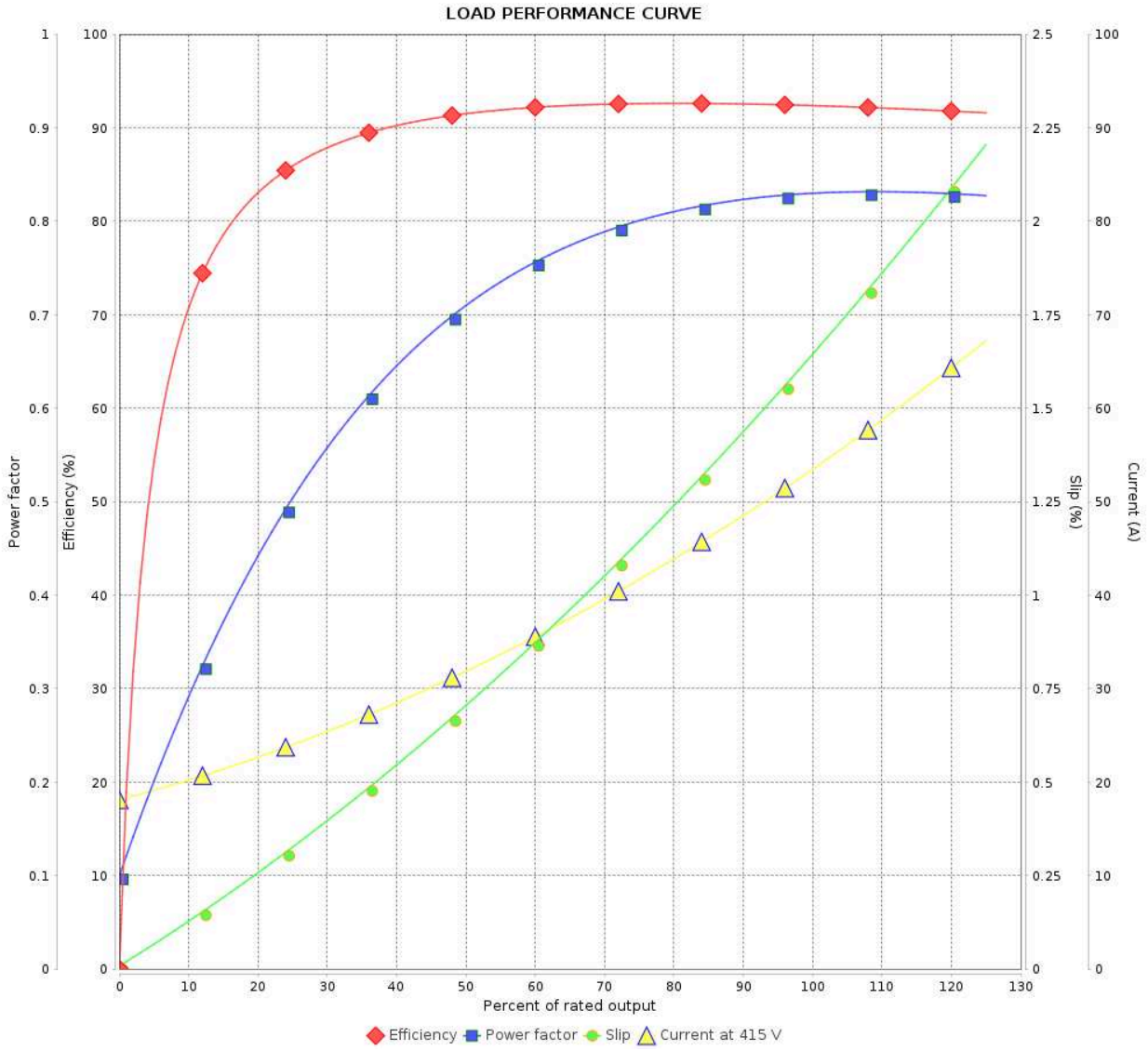

Performance	: 415 V 50 Hz 4P IE2		
Rated current	: 54.4 A	Moment of inertia (J)	: 0.2551 kgm²
LRC	: 5.9	Duty cycle	: Cont.(S1)
Rated torque	: 19.7 kgfm	Insulation class	: F
Locked rotor torque	: 220 %	Service factor	: 1.15
Breakdown torque	: 300 %	Temperature rise	: 80 K
Rated speed	: 1475 rpm	Design	: B

Rev.	Changes Summary	Performed	Checked	Date

Performed by				
Checked by			Page	Revision
Date	09/07/2026		8 / 8	

This document is exclusive property of WEG S/A. Reprinting is not allowed without written authorization of WEG S/A.
Subject to change without notice

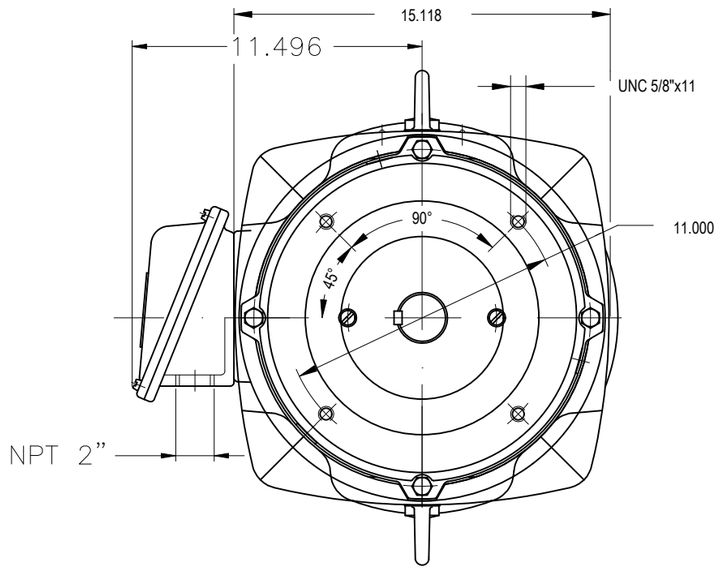

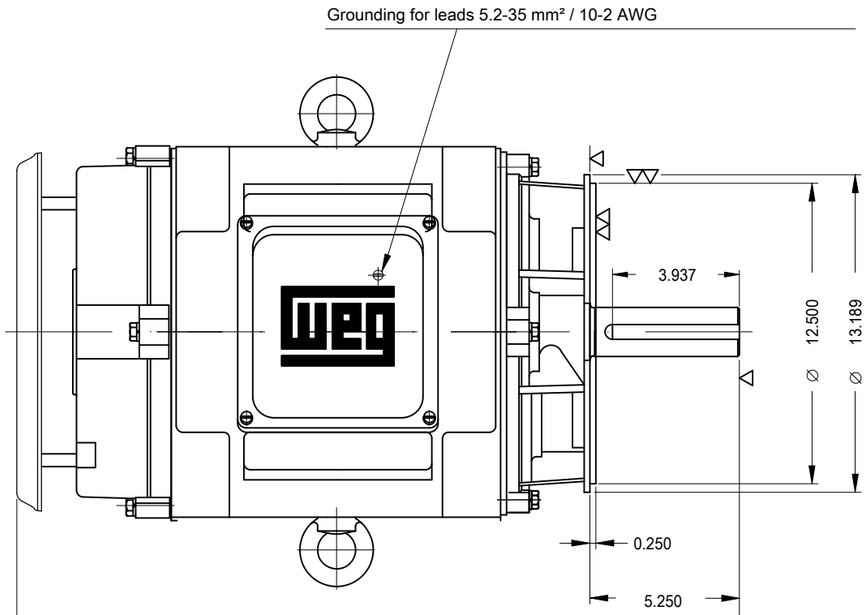

With drip cover
Color RAL 5009
Painting plan 203A
Mounting B14R(D)

DE Shaft End

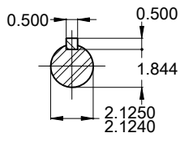

40 HP 04 Poles 60 Hz | A

ECM	LOC	SUMMARY OF MODIFICATIONS	EXECUTED	CHECKED	RELEASED	DATE	VER
			HYBRISUSER				00

EXECUTED	HYBRISUSER	THREE PH. MOTOR GENERAL NEMA PREM. EFF.	PREVIEW
CHECKED		FRAME 324TC IP23 ODP	WDD 00
RELEASED			
REL. DATE		WMO Jaragua do Sul Product Engineering	SHEET 1 / 1

Dimensions in inches
XME A3

WEG's property. Forbidden reproduction without previous authorization.