DATASHEET
Contactors



Main Features

Reference	: CWM
Product code	: 10535742
Rated current Ie AC-3 (Ue ≤ 440 V)	: 180 A
Main contacts (power)	: 3 NO
Auxiliary contacts	: 2 NO + 2 NC
Control voltage	: 110-130V 50/60Hz-DC
Type of terminal	: Screw

Basic data

Rated utilization voltage Ue		
- IEC / UL		: 1000 V / 600 V
Isolation voltage Ui (pollution degree 3)		
- IEC / UL		: 1000 V / 600 V
Rated impulse withstand voltage Uimp		: 8 kV
- Frequency limits [1]		: 25 Hz ... 400 Hz
- Mechanical lifespan		
AC-operated contactor		: 10 million
DC-operated contactor		: 10 million
Electrical lifespan - Ie AC3		: 1 million
Number of coil terminals (AC Coil)		
AC coil contactors		: 2
- DC coil contactors		: 2
Resistance to vibration (IEC 60068-2-6)		
opened contactor		: 4 g
closed contactor		: 4 g
Resistance to mechanical shock (½ sinusoid = 11ms)		
opened contactor		: 3 g
closed contactor		: 3 g
Installation		: Not available
Degree of protection (IEC 60529)		
Main circuit		: IP00
Control circuit		: IP20

Alternating current - control circuit

Isolation voltage Ui (pollution degree 3)		: 1000 V / 600 V
- IEC / UL		
Standard voltages for 50/60 Hz		:
Comand circuit operation limits		
- control circuit 60 Hz	- pick up	:
	- drop out	:
- control circuit 50 Hz	- pick up	:
	- drop out	:
- Average coil consumption		
- operating at 60 Hz	- closed magnetic circuit	:
	- power factor (cos φ)	:
	- Thermal power dissipated	:
	- closing the magnetic circuit	:
- operating at 50 Hz	- closed magnetic circuit	:
	- power factor (cos φ)	:
	- Thermal power dissipated	:
	- closing the magnetic circuit	:
Average time of operation		
- closing the NO contacts		:
- opening the NO contacts		:

Direct current - command circuit

- IEC / UL	
Standard voltages	:
Comand circuit operation limits	
- pick up	:
- drop out	:
Average consumption	
- closed magnetic circuit	:
- closing the magnetic circuit	:
Thermal power dissipated	:
Average time of operation	
- closing the NO contacts	:
- opening the NO contacts	:

Main contacts (power)

Rated utilization current Ie	
- AC-3 (Ue ≤ 440 V)	: 180 A

- AC-4 (Ue ≤ 440 V) : 73 A
- AC-1 (θ ≤ 55 °C, Ue ≤ 690 V) : 225 A

Rated utilization voltage Ue
- IEC / UL : 1000 V / 600 V

Number of main contacts : 3 NO
Establishment capacity (IEC 60947) : 2100 A
Breaking capacity (IEC/EN 60947)
- Ue≤400V : 1400 A
- Ue=500V : 1400 A
- Ue=690V : 938 A

Temporary permissible current (without previously current conduction during 15 min at θ ≤ 40 ºC)
- 1 sec : 4649 A
- 10 sec : 2100 A
- 10 sec : 2100 A
- 1 min :
- 10 min : Not available

Protection against short circuit of the contacts main fuse (gL/gG)
- @600V - UL/CSA : 10 kA
- type 1 coordenation : 355 A
- type 2 coordenation : 250 A

Average power dissipated per pole
AC-1 (θ ≤ 55 °C, Ue ≤ 690 V) : 21.6 W
AC-3 (Ue ≤ 440 V) : 13.8 W

Utilization category AC-3

Rated current Ie (θ ≤ 55 ºC)
- Ue ≤ 440V : 180 A
- Ue ≤ 500V : 155 A
- Ue ≤ 690V : 135 A

Maximum percentage (600 ops./h) : 100 %

Orientative values of power (IEC)-three-phase induction motors (50/60 Hz)-IV poles-1800 rpm		
Voltage	kW	cv or HP
220 / 240 V	55 kW	75 cv
380 / 400 V	90 kW	125 cv
415 / 440 V	110 kW	150 cv
500 V	110 kW	150 cv
660 / 690 V	110 kW	150 cv

Orientative values of power (UL)		
Voltage	1 Phase	3 Phase
120 V	Not available	Not available
200 V	Not applicable	60
208 V	Not available	Not available
240 V	Not available	75
480 V	Not available	150
600 V	Not available	200

Utilization category AC-4

Rated current Ie (θ ≤ 55 ºC)
- Ue ≤ 440V : 73 A
- Ue ≤ 500V : 66 A
- Ue ≤ 690V : 58 A

Orientative values of power (IEC)-three-phase induction motors (50/60 Hz)-IV poles-1800 rpm		
Voltage	kW	cv or HP
220 / 240 V	22 kW	30 HP
380 / 400 V	37 kW	50 HP
415 / 440 V	45 kW	60 HP
500 V	45 kW	60 HP
660 / 690 V	55 kW	75 HP

Utilization category AC-1 (3 P/NA)

Maximum percentage (600 ops./h) : 1

Maximum power operation θ ≤ 55ºC (three resistors)	
Voltage	Power
220 / 240 V	85 kW
380 / 400 V	145 kW
415 / 440 V	160 kW
500 V	190 kW
660 / 690 V	255 kW

Auxiliary contacts

Standards compliance : Not available
Insulation voltage Ui
- IEC / UL : Not available / Not available

Rated utilization voltage Ue
- IEC / UL : Not available / Not available
Conventional thermal current Ith (θ ≤ 55ºC) : Not available
Rated current Ie - IEC 60947-5-1/AC-15
- 220 / 240 V : Not available
- 380 / 440 V : Not available
- 500 V : Not available
- 660 / 690 V : Not available
Rated current Ie - IEC 60947-5-1/DC-13
- 24 V : Not available
- 48 V : Not available
- 110 V : Not available
- 220 V : Not available
- 440 V : Not available
Establishment capacity - (AC-15 and Ue ≤ 690V 50/60Hz) : Not available
Interruption capacity - (AC-15 and Ue ≤ 400V 50/60Hz) : Not available
Protection against short circuit of the contacts main fuse (gL/gG) : Not available
Control circuit reliability : Not available
Electrical lifespan : Not available
Mechanical lifespan : Not available
Non-overlapping time between NO and NC contacts : Not available
Impedance per pole : Not available

Connection

Main contacts
Type of the screw : M8 hexagonal
Section of the conductors

Type of the conductor	Section (IEC)	Section (UL)
Rigid cable	1 x Not available	1 x
	2 x Not available	2 x
Flexible cable without terminal	1 x Not available	1 x
	2 x Not avaliable	2 x
Flexible cable with terminal	1 x Not contain	1 x
	2 x Not contain	2 x

Tightening torque (IEC/UL) : 14...16 Nm / Not contain
Control circuit
Type of the screw : M3,5 Flat/Phillips
Section of the conductors

Type of the conductor	Section (IEC)	Section (UL)
Rigid cable	1 x 0,5...4 mm²	1 x
	2 x 0,5...2,5 mm²	2 x
Flexible cable without terminal	1 x 1...4 mm²	1 x
	2 x 1...2,5 mm²	2 x
Flexible cable with terminal	1 x 0,5...4 mm²	1 x
	2 x 0,5...2,5 mm²	2 x

Tightening torque (IEC/UL) : 0,8...1,5 Nm / Not available

Direct current application

Utilization category DC-1 (L/R ≤ 1 ms)

	Rated utilization current (Ie)			
	Pole(s) in series			
Voltage	1	2	3	4
Ue ≤ 24V	200 A	225 A	225 A	Not available
Ue ≤ 48V	Not available	Not available	Not available	Not available
Ue ≤ 60V	Not available	Not available	Not available	Not available
Ue ≤ 125V	Not available	Not available	Not available	Not available
Ue ≤ 220V	Not available	140 A	225 A	Not available
Ue ≤ 440V	Not available	Not available	105 A	Not available
Ue ≤ 600V	Not available	Not available	Not available	Not available

Utilization category DC-3 (L/R ≤ 2.5 ms)

	Rated utilization current (Ie)			
	Pole(s) in series			
Voltage	1	2	3	4
Ue ≤ 24V	180 A	180 A	180 A	Not available
Ue ≤ 48V	Not available	Not available	Not available	Not available
Ue ≤ 60V	Not available	Not available	Not available	Not available
Ue ≤ 125V	Not available	Not available	Not available	Not available
Ue ≤ 220V	Not available	65 A	150 A	Not available
Ue ≤ 440V	Not available	Not available	50 A	Not available
Ue ≤ 600V	Not available	Not available	Not available	Not available

Operation category DC-5 (L/R ≤ 15ms)

	Rated utilization current (Ie)			
	Pole(s) in series			
Voltage	1	2	3	4
Ue ≤ 24V	180 A	180 A	180 A	Not available
Ue ≤ 48V	Not available	Not available	Not available	Not available
Ue ≤ 60V	Not available	Not available	Not available	Not available
Ue ≤ 125V	Not available	Not available	Not available	Not available
Ue ≤ 220V	Not available	65 A	150 A	Not available
Ue ≤ 440V	Not available	Not available	50 A	Not available
Ue ≤ 600V	Not available	Not available	Not available	Not available

Ambient temperature

Operation : -25 °C ... +55 °C
Storage : -55 °C ... +80 °C
Maximum altitude with no change of rated values [2] : 3000 m

Dimensions

Height :
Width :
Depth :
Weight :

Standards

IEC 60947-1
UL 508

Certifications

CE, UL, UL-NOM, IRAM, BUREAU VERITAS and EAC

Notes

1) Values above 60 Hz should have current reduction;
2) For altitudes of 3000 to 4000 m (0.90 x 0.80 x Ie and Ui) and from 4000 to 5000 m (0.80 x 0.75 x Ie and Ui).

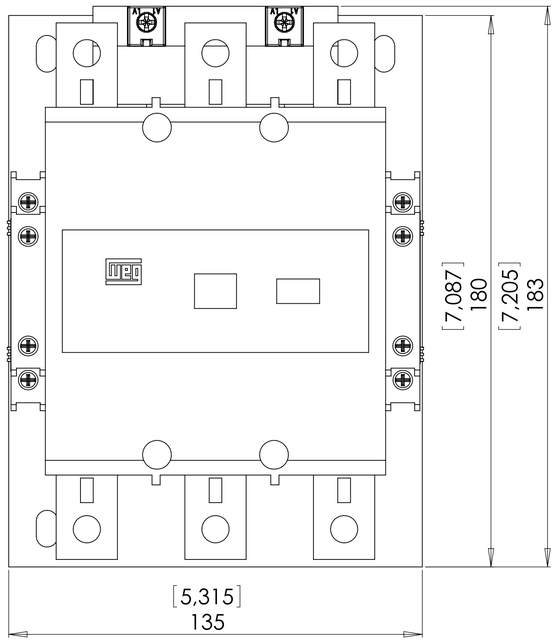

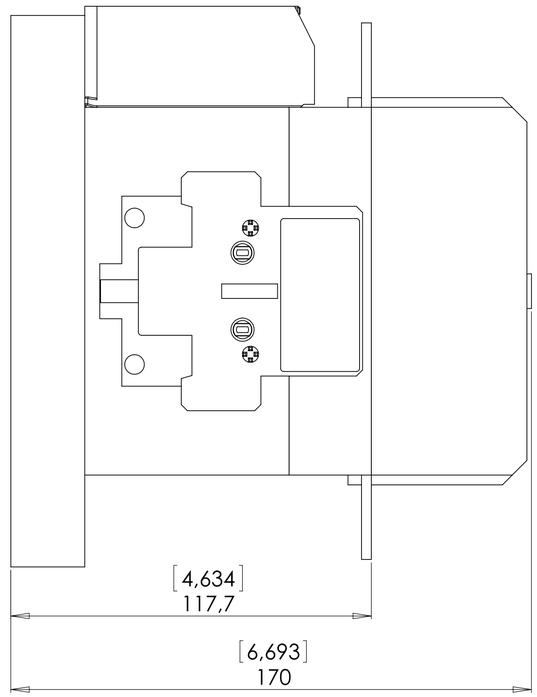

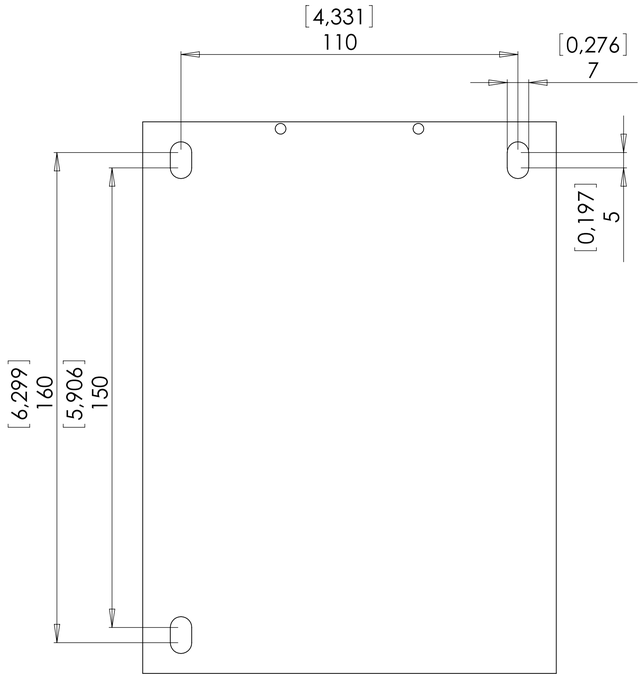

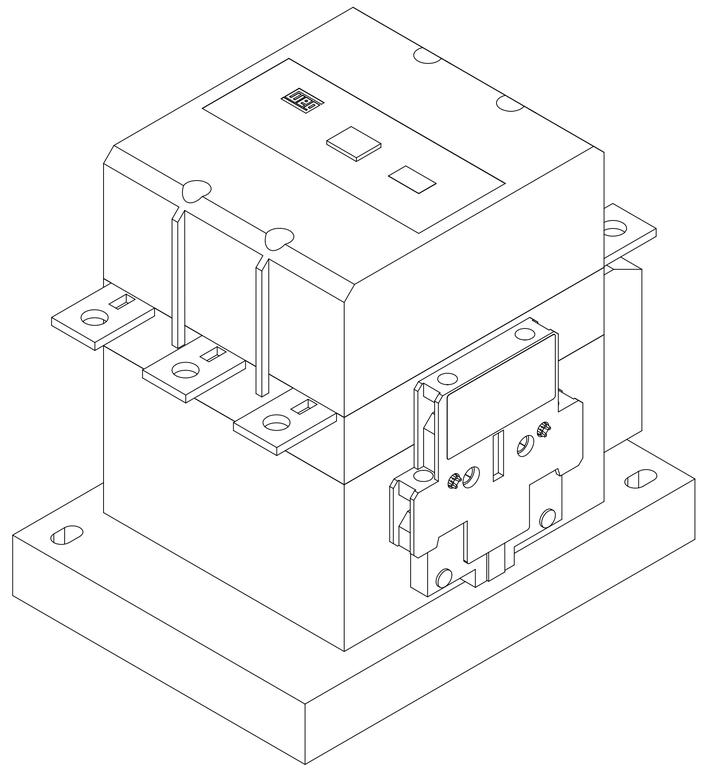

CWM180_E			
13/10/2011	1 : 1	mm [inches]	A1