DATASHEET
Contactors



Main Features

Reference	: CWM
Product code	: 10045471
Rated current Ie AC-3 (Ue ≤ 440 V)	: 12 A
Main contacts (power)	: 3 NO
Auxiliary contacts	: 1 NO
Control voltage	: 110V 50Hz/120V 60Hz
Type of terminal	: Screw

Basic data

Rated utilization voltage Ue		
- IEC / UL		: 690 V / 600 V
Isolation voltage Ui (pollution degree 3)		
- IEC / UL		: 1000 V / 600 V
Rated impulse withstand voltage Uimp		: 6 kV
- Frequency limits [1]		: 25 Hz ... 400 Hz
- Mechanical lifespan		
AC-operated contactor		: 10 million
DC-operated contactor		: 12 million
Electrical lifespan - Ie AC3		: 1,5 million
Number of coil terminals (AC Coil)		
AC coil contactors		: 4
- DC coil contactors		: 4
Resistance to vibration (IEC 60068-2-6)		
opened contactor		: 3 g
closed contactor		: 3 g
Resistance to mechanical shock (½ sinusoid = 11ms)		
opened contactor		: 8 g
closed contactor		: 12 g
Installation		: Not available
Degree of protection (IEC 60529)		
Main circuit		: IP20
Control circuit		: IP20

Alternating current - control circuit

Isolation voltage Ui (pollution degree 3)		: 1000 V / 600 V
- IEC / UL		
Standard voltages for 50/60 Hz		: 12...660 V
Comand circuit operation limits		
- control circuit 60 Hz	- pick up	: 0,4...0,76xUs
	- drop out	: 0,25...0,65xUs
- control circuit 50 Hz	- pick up	: 0.4...0.76xUs
	- drop out	: 0.25...0.65xUs
- Average coil consumption		
- operating at 60 Hz	- closed magnetic circuit	: 5,5...9,3 VA
	- power factor (cos φ)	: 0.28
	- Thermal power dissipated	: 2,6 W
	- closing the magnetic circuit	: 70 VA
- operating at 50 Hz	- closed magnetic circuit	: 5.5...9.3 A
	- power factor (cos φ)	: 0.28
	- Thermal power dissipated	: 2.6 W
	- closing the magnetic circuit	: 70 VA
Average time of operation		
- closing the NO contacts		: 8...20 ms
- opening the NO contacts		: 6...13 ms

Direct current - command circuit

- IEC / UL	
Standard voltages	:
Comand circuit operation limits	
- pick up	:
- drop out	:
Average consumption	
- closed magnetic circuit	:
- closing the magnetic circuit	:
Thermal power dissipated	:
Average time of operation	
- closing the NO contacts	:
- opening the NO contacts	:

Main contacts (power)

Rated utilization current Ie	
- AC-3 (Ue ≤ 440 V)	: 12 A

- AC-4 (Ue ≤ 440 V) : 7 A
- AC-1 (θ ≤ 55 °C, Ue ≤ 690 V) : 25 A

Rated utilization voltage Ue
- IEC / UL : 690 V / 600 V

Number of main contacts : 3 NO
Establishment capacity (IEC 60947) : 300 A
Breaking capacity (IEC/EN 60947)
- Ue≤400V : 250 A
- Ue=500V : 250 A
- Ue=690V : 130 A

Temporary permissible current (without previously current conduction during 15 min at θ ≤ 40 ºC)
- 1 sec : 455 A
- 10 sec : 144 A
- 10 sec : 144 A
- 1 min :
- 10 min : Not available

Protection against short circuit of the contacts main fuse (gL/gG)
- @600V - UL/CSA : 5 kA
- type 1 coordenation : 50 A
- type 2 coordenation : 35 A

Average power dissipated per pole
AC-1 (θ ≤ 55 °C, Ue ≤ 690 V) : 1,5 W
AC-3 (Ue ≤ 440 V) : 0,3 W

Utilization category AC-3

Rated current Ie (θ ≤ 55 ºC)
- Ue ≤ 440V : 12 A
- Ue ≤ 500V : 5,5 kW
- Ue ≤ 690V : 9 A

Maximum percentage (600 ops./h) : 100 %

Orientative values of power (IEC)-three-phase induction motors (50/60 Hz)-IV poles-1800 rpm		
Voltage	kW	cv or HP
220 / 240 V	3 kW	4 HP
380 / 400 V	5,5 kW	7,5 HP
415 / 440 V	6,5 kW	8,7 HP
500 V	6.5 kW	8.7 cv
660 / 690 V	7,5 kW	10 HP

Orientative values of power (UL)		
Voltage	1 Phase	3 Phase
120 V	0.75	Not available
200 V	Not applicable	3
208 V	Not available	Not available
240 V	2	3
480 V	Not available	7.5
600 V	Not available	10

Utilization category AC-4

Rated current Ie (θ ≤ 55 ºC)
- Ue ≤ 440V : 7 A
- Ue ≤ 500V : Not available
- Ue ≤ 690V : 7 A

Orientative values of power (IEC)-three-phase induction motors (50/60 Hz)-IV poles-1800 rpm		
Voltage	kW	cv or HP
220 / 240 V	1,5 kW	2 HP
380 / 400 V	3 kW	4 HP
415 / 440 V	3,7 kW	5 HP
500 V	3.7 kW	5 HP
660 / 690 V	4,5 kW	6 HP

Utilization category AC-1 (3 P/NA)

Maximum percentage (600 ops./h) : 1

Maximum power operation θ ≤ 55ºC (three resistors)	
Voltage	Power
220 / 240 V	9,5 kW
380 / 400 V	16,5 kW
415 / 440 V	18 kW
500 V	21,5 kW
660 / 690 V	28.5 kW

Auxiliary contacts

Standards compliance : IEC 600947-5-1
Insulation voltage Ui
- IEC / UL : 1000 V / 600 V

Rated utilization voltage Ue	
- IEC / UL	: 690 V / 600 V
Conventional thermal current Ith (θ ≤ 55ºC)	: 20 A
Rated current Ie - IEC 60947-5-1/AC-15	
- 220 / 240 V	: 10 A
- 380 / 440 V	: 5 A
- 500 V	: 4 A
- 660 / 690 V	: 2 A
Rated current Ie - IEC 60947-5-1/DC-13	
- 24 V	: 6 A
- 48 V	: 4 A
- 110 V	: 2 A
- 220 V	: 0,7 A
- 440 V	: 0.35 A
Establishment capacity - (AC-15 and Ue ≤ 690V 50/60Hz)	: 10 x Ie
Interruption capacity - (AC-15 and Ue ≤ 400V 50/60Hz)	: 10 x Ie
Protection against short circuit of the contacts main fuse (gL/gG)	: 10 A
Control circuit reliability	: 17/5 V/mA
Electrical lifespan	: 1 Million
Mechanical lifespan	: 10 million
Non-overlapping time between NO and NC contacts	: 1,5 ms
Impedance per pole	: 1.28 mΩ

Connection

Main contacts

Type of the screw : M3,5 Flat/Phillips

Section of the conductors

Type of the conductor	Section (IEC)	Section (UL)
Rigid cable	1 x 0,5...6 mm²	1 x
	2 x 0,5...6 mm²	2 x
Flexible cable without terminal	1 x 1...6 mm²	1 x
	2 x 2,5...6 mm²	2 x
Flexible cable with terminal	1 x 0,5...4 mm²	1 x
	2 x 0,5...2,5mm²	2 x

Tightening torque (IEC/UL) : 1...1.5 Nm / 15 lb.in

Control circuit

Type of the screw : M3,5 Flat/Phillips

Section of the conductors

Type of the conductor	Section (IEC)	Section (UL)
Rigid cable	1 x 0,5...4 mm²	1 x
	2 x 0,5...2,5 mm²	2 x
Flexible cable without terminal	1 x 1...4 mm²	1 x
	2 x 1...2,5 mm²	2 x
Flexible cable with terminal	1 x 0,5...4 mm²	1 x
	2 x 0,5...2,5 mm²	2 x

Tightening torque (IEC/UL) : 0,8...1,1 Nm / 10 lb.in

Direct current application

Utilization category DC-1 (L/R ≤ 1 ms)

	Rated utilization current (Ie)			
	Pole(s) in series			
Voltage	1	2	3	4
Ue ≤ 24V	18 A	25 A	25 A	25 A
Ue ≤ 48V	15 A	25 A	25 A	25 A
Ue ≤ 60V	12 A	25 A	25 A	25 A
Ue ≤ 125V	6 A	18 A	25 A	25 A
Ue ≤ 220V	0.8 A	7.5 A	25 A	25 A
Ue ≤ 440V	0,4 A	0.8 A	8 A	15 A
Ue ≤ 600V	Not available	0,4 A	4 A	8 A

Utilization category DC-3 (L/R ≤ 2.5 ms)

	Rated utilization current (Ie)			
	Pole(s) in series			
Voltage	1	2	3	4
Ue ≤ 24V	12 A	18 A	18 A	Not available
Ue ≤ 48V	9 A	18 A	18 A	Not available
Ue ≤ 60V	7.5 A	18 A	18 A	Not available
Ue ≤ 125V	2 A	10 A	15 A	Not available
Ue ≤ 220V	0,6 A	2 A	12 A	Not available
Ue ≤ 440V	Not available	0,3 A	1,5 A	Not available
Ue ≤ 600V	Not available	Not available	0,8 A	Not available

Operation category DC-5 (L/R ≤ 15ms)

	Rated utilization current (Ie)			
	Pole(s) in series			
Voltage	1	2	3	4
Ue ≤ 24V	12 A	18 A	18 A	18 A
Ue ≤ 48V	9 A	18 A	18 A	18 A
Ue ≤ 60V	7.5 A	18 A	18 A	18 A
Ue ≤ 125V	0,8 A	5 A	15 A	15 A
Ue ≤ 220V	Not available	0,8 A	3 A	10 A
Ue ≤ 440V	Not available	Not available	0,5 A	2 A
Ue ≤ 600V	Not available	Not available	Not available	0.75 A

Ambient temperature

Operation : -25 °C ... +55 °C
Storage : -55 °C ... +80 °C
Maximum altitude with no change of rated values [2] : 3000 m

Dimensions

Height : 81 mm (3.19 in)
Width : 45 mm (1.77 in)
Depth : 87 mm (3.43 in)
Weight : 300 g

Standards

IEC 60947-1
UL 508

Certifications

CE, UL, UL-NOM, IRAM, BUREAU VERITAS and EAC

Notes

1) Values above 60 Hz should have current reduction;
2) For altitudes of 3000 to 4000 m (0.90 x 0.80 x Ie and Ui) and from 4000 to 5000 m (0.80 x 0.75 x Ie and Ui).

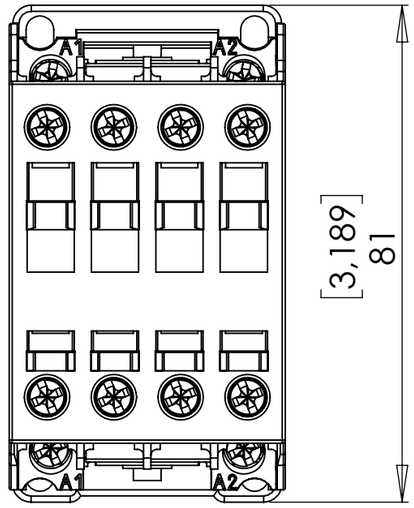

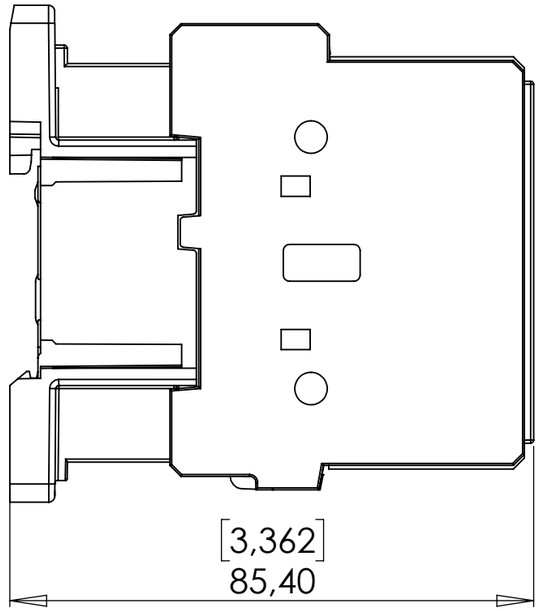

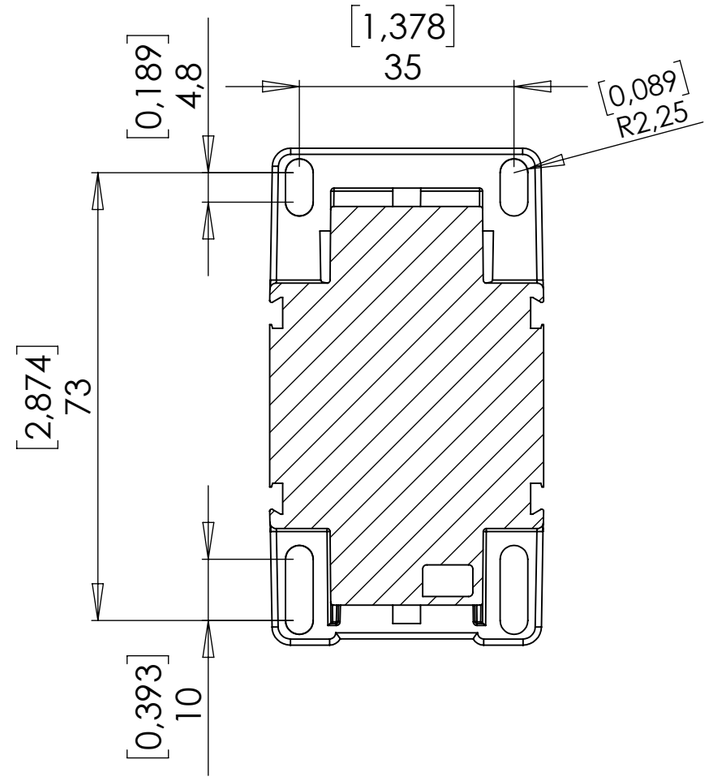

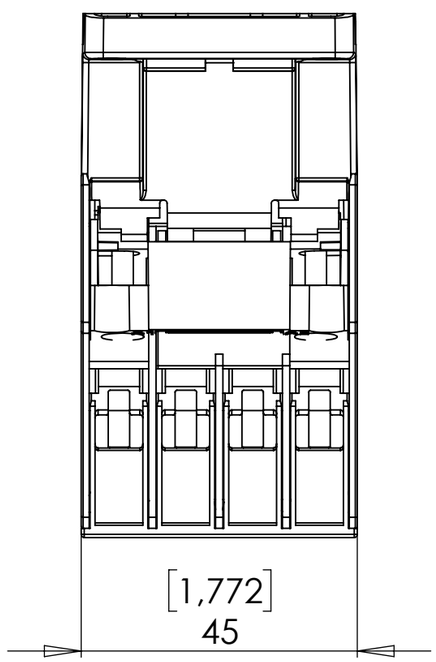

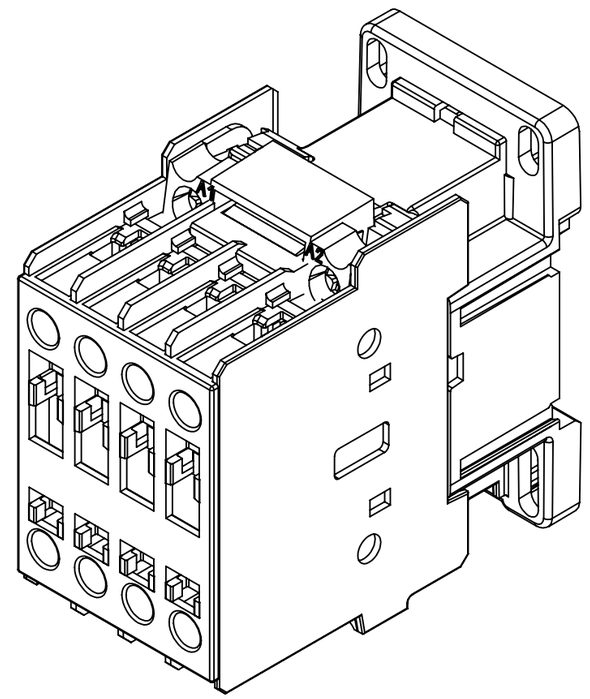

CWM9...18-CAWM4		
16/01/2018	1:1	mm [inches]

A3