DATA SHEET

Single Phase Induction Motor - Squirrel Cage

Customer :

Product line : Rolled Steel 00022 Single-Phase Product code : 18463442

Frame	: 56	Locked rotor time	: 18s (cold) 10s (hot)
Output	: 0.75 HP (0.55 kW)	Temperature rise	: 80 K
Frequency	: 60 Hz	Duty cycle	: Cont.(S1)
Rated voltage	: 115/230 V	Ambient temperature	: -20°C to +40°C
Poles	: 4	Altitude	: 1000 m.a.s.l.
Rated current	: 10.6/5.30 A	Protection degree	: IP55
	: 6.4x(Code M)	Cooling method	: IC411 - TEFC
Rated speed	: 1745 rpm	Mounting	: F-1
Rated torque	: 0.312 kgfm	Rotation[1]	: Both (CW and CCW)
Insulation class	: F	Noise level[2]	: 54.0 dB(A)
Service factor	: 1.15	Starting method	: Direct On Line
Moment of inertia (J)	: 0.0033 kgm²	Approx. weight[3]	: 14.3 kg
Design	: N		

Output	50%	75%	100%
Efficiency (%)	57.0	65.0	68.5
Power Factor	0.47	0.58	0.67

Foundation loads

Max. traction	: 20 kgf
Max. compression	: 34 kgf

		Drive end	Non drive end
Bearing type	:	6203 2RS	6202 2RS
Sealing	:	V'Ring	Without Bearing Seal
Lubrication interval	:	-	-
Lubricant amount	:	-	-
Lubricant type	:	Mobil Polyrex EM	

Notes

This revision replaces and cancel the previous one, which must be eliminated.
(1) Looking the motor from the shaft end.
(2) Measured at 1m and with tolerance of +3dB(A).
(3) Approximate weight subject to changes after manufacturing process.
(4) At 100% of full load.

These are average values based on tests with sinusoidal power supply, subject to the tolerances stipulated in NEMA MG-1.

Rev.	Changes Summary	Performed	Checked	Date

Performed by				
Checked by			Page	Revision
Date	11/05/2026		1 / 2	

This document is exclusive property of WEG S/A. Reprinting is not allowed without written authorization of WEG S/A.
Subject to change without notice

LOAD PERFORMANCE CURVE

Single Phase Induction Motor - Squirrel Cage

Customer :

Product line : Rolled Steel 00022 Single-Phase Product code : 18463442

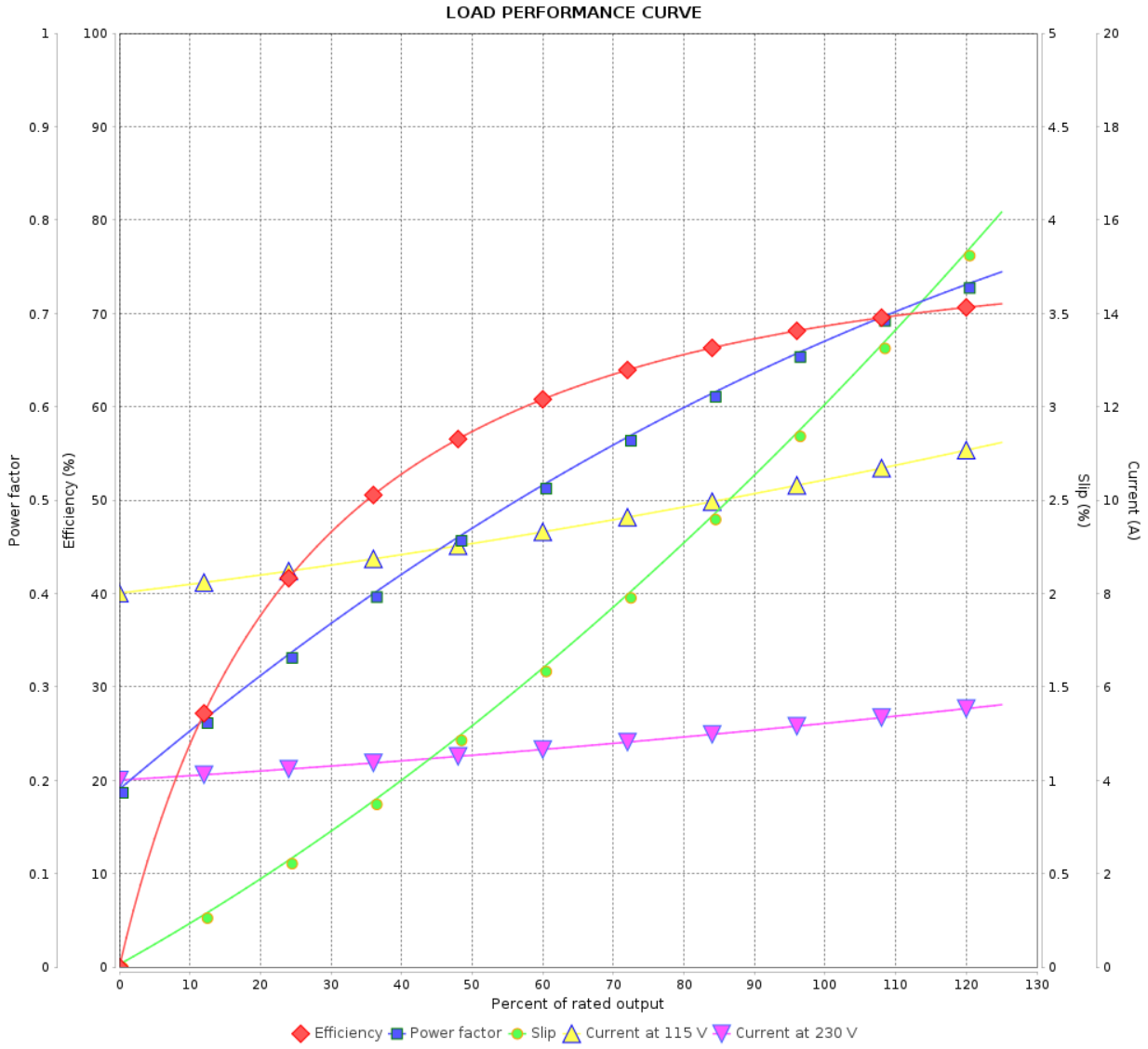

Rev.	Changes Summary	Performed	Checked	Date

Performed by				
Checked by			Page	Revision
Date	11/05/2026		2 / 2	

This document is exclusive property of WEG S/A. Reprinting is not allowed without written authorization of WEG S/A.
Subject to change without notice

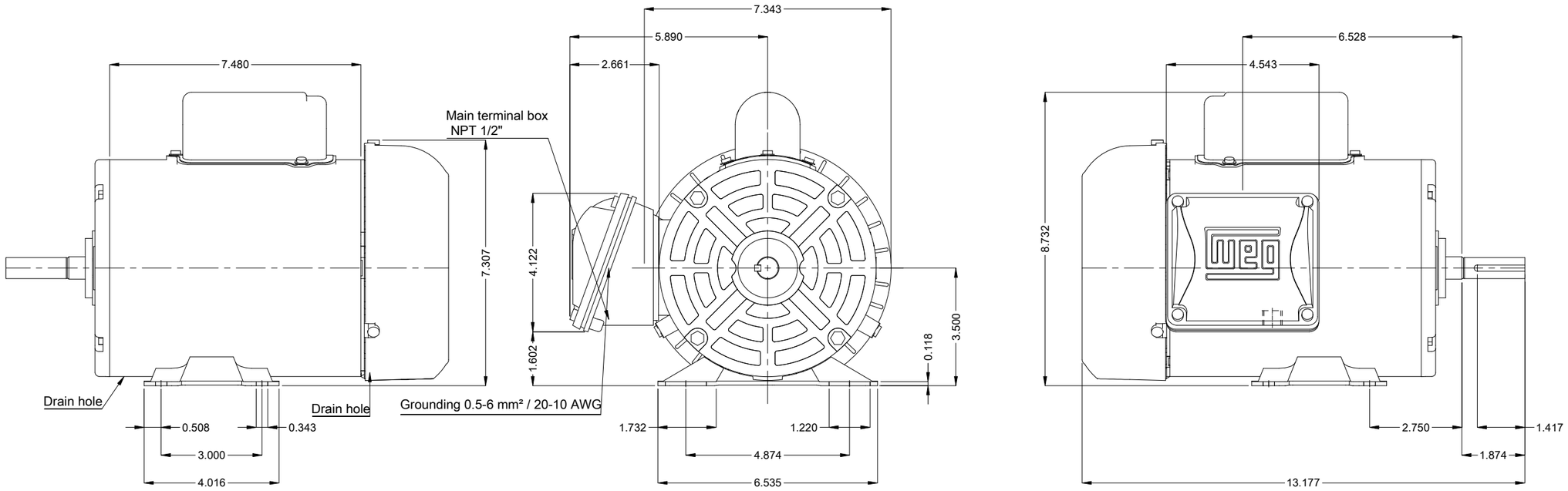

DE Shaft End

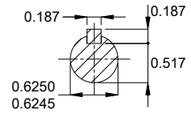

Reinforce the foot with 2 mig welding spots
Fan cover - steel plate
Mounting MARKET F-1/B3R(D)
Mounting F-1/B3R(D)

0.75 HP 04 Poles 60 Hz | A

Scale 2 : 7

ECM	LOC	SUMMARY OF MODIFICATIONS	EXECUTED	CHECKED	RELEASED	DATE	VER
			HYBRISUSER				00

EXECUTED	HYBRISUSER
CHECKED	
RELEASED	
REL. DATE	

SINGLE PH. MOTOR ROLLED STEEL FARM DUTY
FRAME 56 IP55 TEFC

PREVIEW
WDD 00
SHEET 1 / 1

Dimensions in inches
A3

WEG's property. Forbidden reproduction without previous authorization.