DATA SHEET

Three Phase Induction Motor - Squirrel Cage

Customer	:
Sales document	: 50248488-10

Product line	: Special Motor
Product code	: 14893765

Frame	: 404/5LP
Output	: 100 HP (75 kW)
Poles	: 4
Frequency	: 60 Hz
Rated voltage	: 575 V
Rated current	: 90.7 A
L. R. Amperes	: 653 A
LRC	: 7.2 Code H
No load current	: 34.4 A
Rated speed	: 1780 rpm
Slip	: 1.11 %
Rated torque	: 40.8 kgfm
Locked rotor torque	: 270 %
Pull up torque	: 210 %
Breakdown torque	: 300 %
Insulation class	: F
Service factor	: 1.15
Moment of inertia (J)	: 1.11 kgm²

Locked rotor time	: 13 s (hot) 23 s (cold)
Temperature rise[4]	: 80 K
Duty cycle	: S1
Ambient temperature	: -20 °C to +40 °C
Altitude	: 1000 m.a.s.l
Protection degree	: IP55
Cooling method	: TEFC-XP
Mounting	: V1
Rotation[1]	: Both
Noise level[2]	: 75 dB(A)
Starting method	: Inverter
Approx. weight[3]	: 554 kg
Design	: A

Output	Start	50%	75%	100%
Efficiency (%)	-	94.5	95.0	95.4
Power Factor	0.00	0.72	0.82	0.87

Load type	: -
Load torque	: -
Load inertia (J=GD²/4)	: -

Operation limits with inverter
3 Hz to 60 Hz (Variable torque) : 40.2 kgfm

	Drive end	Non drive end
Bearing type	6314-C3	7315BECB
Lubrication interval	4895 h	3268 h
Lubricant amount	27 g	30 g
Lubricant type	MOBIL POLYREX EM	

Notes:
In Line Extra Thrust.
NEMA Premium Efficiency.

Losses at normative operating points (speed;torque), in percentage of rated output power

P1 (0,9;1,0)	P2 (0,5;1,0)	P3 (0,25;1,0)	P4 (0,9;0,5)	P5 (0,5;0,5)	P6 (0,5;0,25)	P7 (0,25;0,25)
0.00	0.00	0.00	0.00	0.00	0.00	0.00

Standards

Specification	: MG1 - Part 10	Vibration	: MG1 - Part 7
Test	: MG1 - Part 12	Tolerance	: MG1 - Part 12
Noise	: MG1 - Part 9		

This revision replaces and cancel the previous one, which must be eliminated..
(1) Looking the motor from the shaft end.
(2) Measured at 1m and with tolerance of +0dB(A).
(3) Approximate weight, subject to be changed after manufacturing process.
(4) At 100% of full load.

These are average values based on tests with sinusoidal power supply, subject to the tolerances stipulated in NEMA MG 1-12.

Rev.	Changes Summary	Performed	Checked	Date
				03/05/2019

Performed by	gbompani	117878/2019	
Checked by	AUTOMATICO	Page	Revision
Date	03/05/2019	1/2	0

This document is exclusive property of WEG S/A. Reprinting is not allowed without written authorization of WEG S/A.

LOAD PERFORMANCE CURVE

Three Phase Induction Motor - Squirrel Cage

Customer	:
Sales document	: 50248488-10
Product line	: Special Motor
Product code	: 14893765

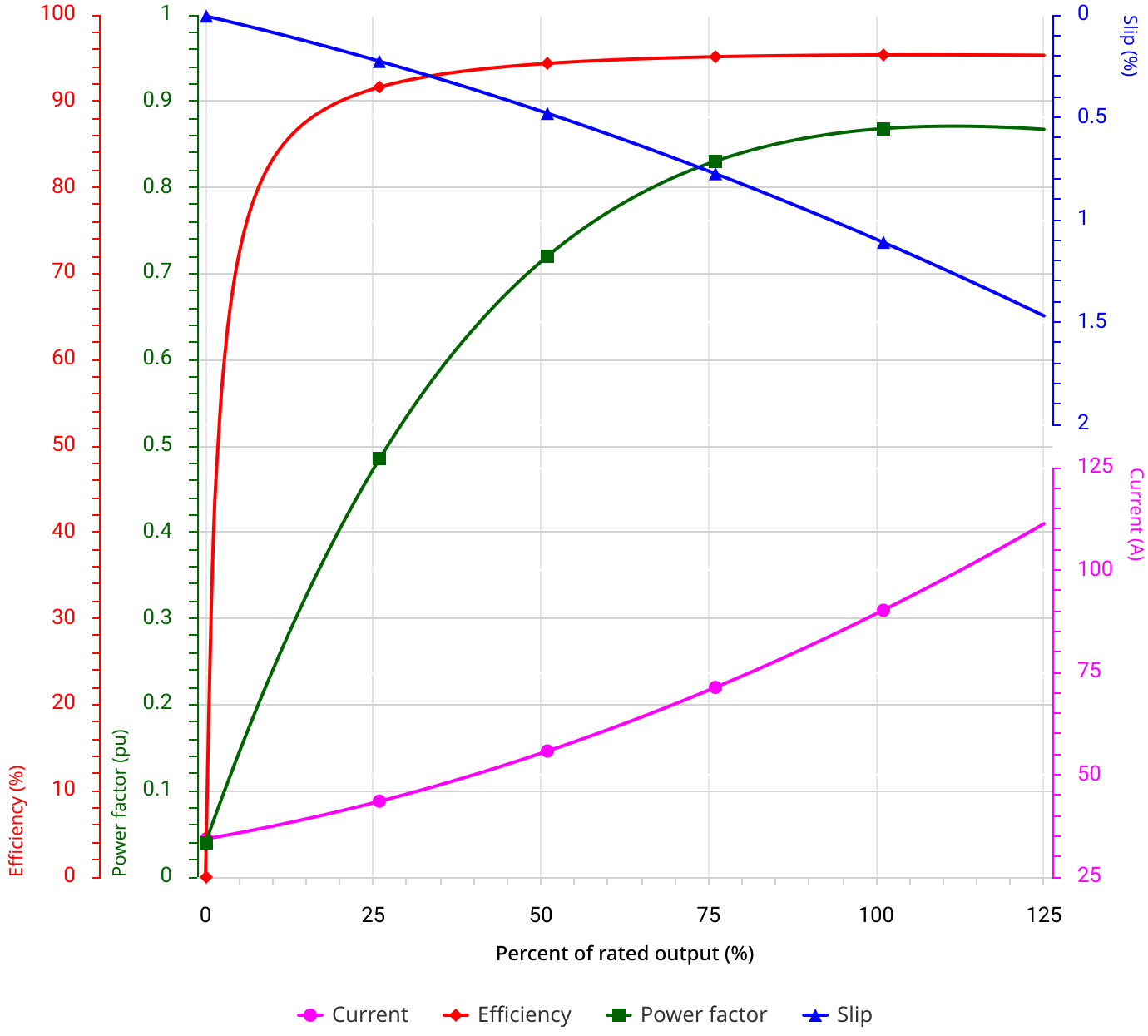

Performance	: 100 HP (75 kW) 575V 60Hz 4P 404/5LP

Rated current	: 90.7 A	Moment of inertia (J)	: 1.11 kgm²
LRC	: 7.2 Code H	Duty cycle	: Cont.(S1)
Rated torque	: 40.8 kgfm	Insulation class	: F
Locked rotor torque	: 270 %	Service factor	: 1.15
Breakdown torque	: 300 %	Temperature rise	: 80 K
Rated speed	: 1780 rpm	Design	: A

Rev.	Changes Summary	Performed	Checked	Date
				03/05/2019

Performed by	gbompani		117878/2019
Checked by	AUTOMATICO		Page / Revision
Date	03/05/2019		0

This document is exclusive property of WEG S/A. Reprinting is not allowed without written authorization of WEG S/A.

EIXO/SHAFT	
PADRÃO/STANDARD	
OPCIONAL/OPTIONAL	
ESPECIAL/SPECIAL	X

Dimensões em polegada
Dimensions in inches

CERTIFIED
WEG MOTORES
Certified document.
Not subject to changes.

THIS IS AN UPDATED REVISION, THE PREVIOUS ONE MUST BE DISREGARDED.

ATENÇÃO/ATTENTION

MOTOR DEVE SER LIGADO APENAS NA POSIÇÃO VERTICAL

MOTOR MUST BE ENERGIZED ONLY IN THE VERTICAL POSITION

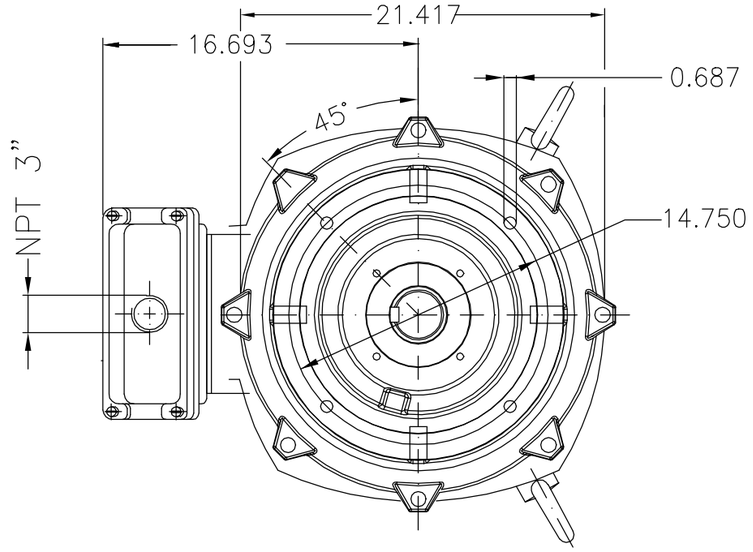

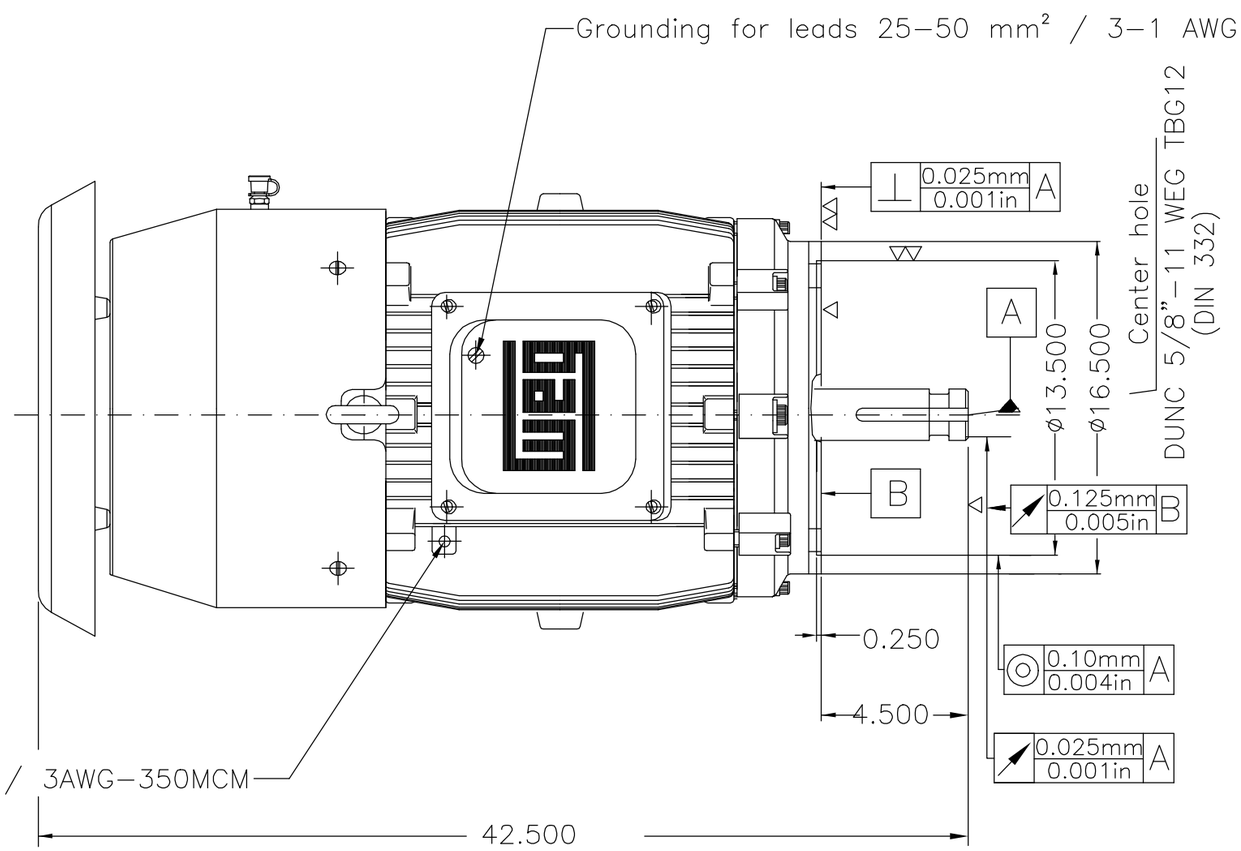

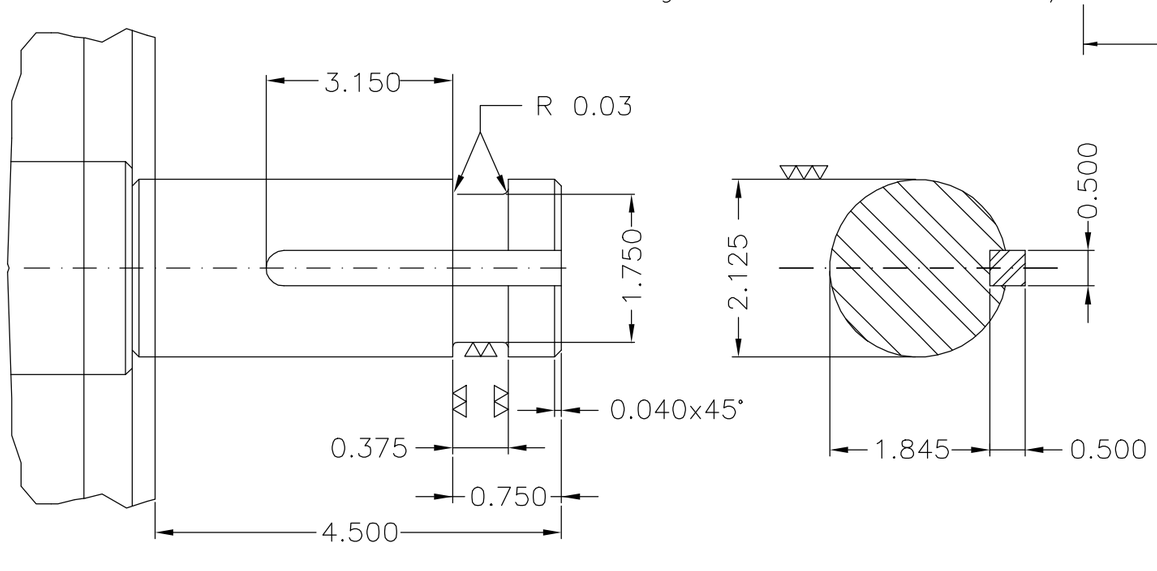

Categoria A / Design A	
Cor RAL 5009 / Color RAL 5009	
Plano de pintura 203A / Painting plan 203A	
Fator de serviço 1.15 / Service factor 1.15	
Forma construtiva NEMA W-6 / Mounting NEMA W-6	
Forma construtiva V1 / Mounting V1	

V.J. PAMENSKY CANADA INC.

ECM / ECM	LOC / LOC	RESUMO MODIFICAÇÃO / SUMMARY OF MODIFICATIONS	EXECUTADO / EXECUTED	VERIFICADO / CHECKED	LIBERADO / RELEASED	DATA / DATE	VER / VER
500001594952		ALTERADO CONF. CLAIM 415204042	RICLAV	DALTONR	DALTONR	24.05.2019	01
500001592859		DOCUMENTO NOVO	CLEITONGS	FERNANDOLUIS	FERNANDOLUIS	07.05.2019	00

EXEC. / EXECUTED	CLEITONGS	THREE-PHASE IN LINE EXTRA THRUST MOTOR	10006592388
VERIF. / CHECKED	FERNANDOLUIS	FRAME 404/5LP IP55 TEFC	000 01
LIBER. / RELEASED	FERNANDOLUIS		
DATA LB / REL DT	07.05.2019	WMO Jaragua do Sul Product Engineering	FOLHA / SHEET 1 / 1

100 HP 04 Poles 60Hz 415447013/1 ELE

A

UNCONTROLLED COPY
RELEASED
ZME A3

Propriedade da WEG. Proibida reprodução sem autorização prévia. / WEG's property. Forbidden reproduction without previous authorization.