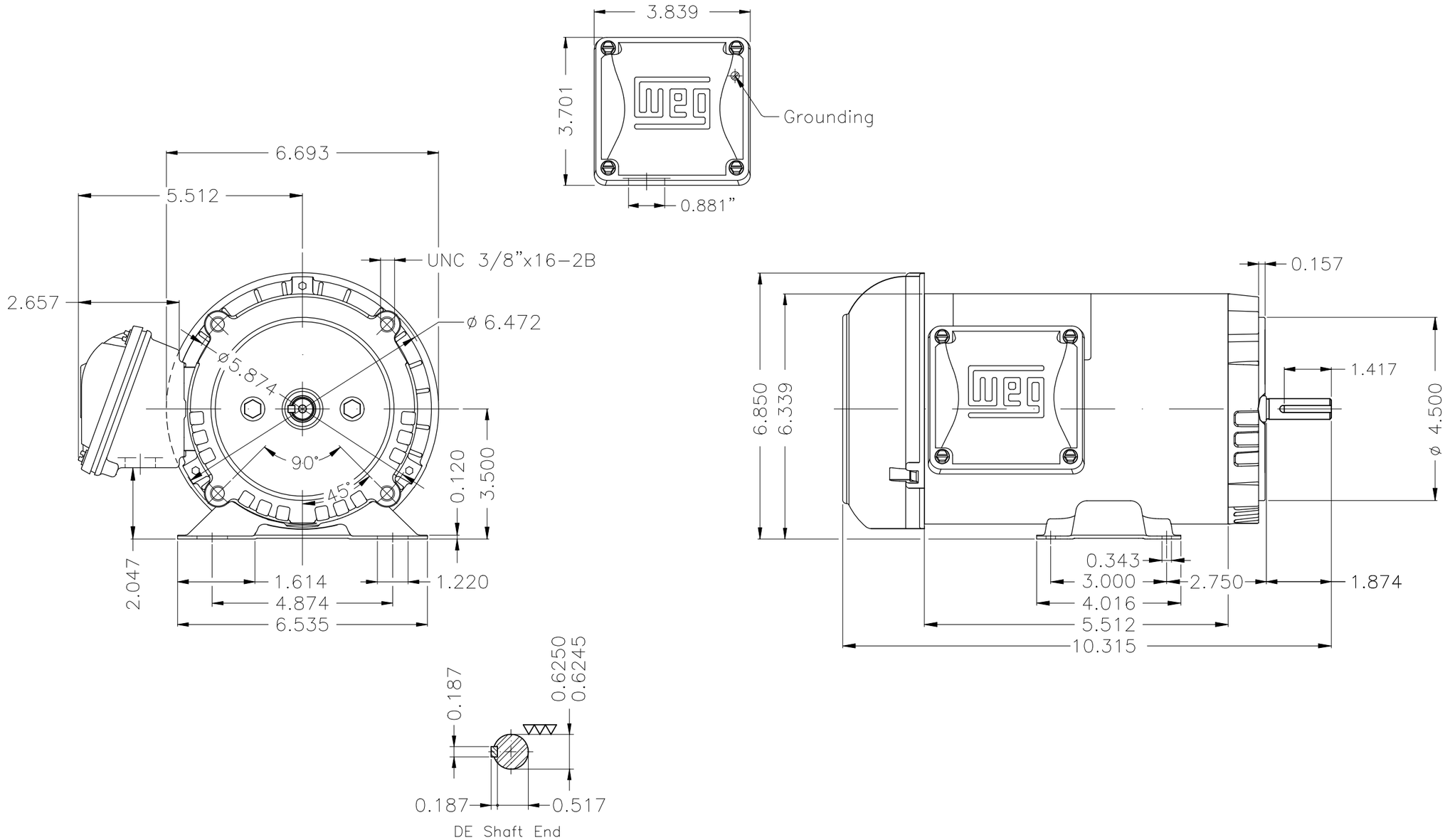

			HYBRISUSER				00
ECM	LOC	SUMMARY OF MODIFICATIONS	EXECUTED	CHECKED	RELEASED	DATE	VER

Color Munsell N 1 matte black

Painting plan 207N

Mounting B34D

EXECUTED	HYBRISUSER	THREE PH. MOTOR ROLLED STEEL PREM. EFF.	PREVIEW
CHECKED		FRAME W56C IP55 TEFC	WDD 00
RELEASED			
REL. DATE		WMO Jaragua do Sul Product Engineering	SHEET 1 / 1

0.25 HP 04 Poles 60 Hz

A

Dimensions in inches

XME A3

WEG's property. Forbidden reproduction without previous authorization.