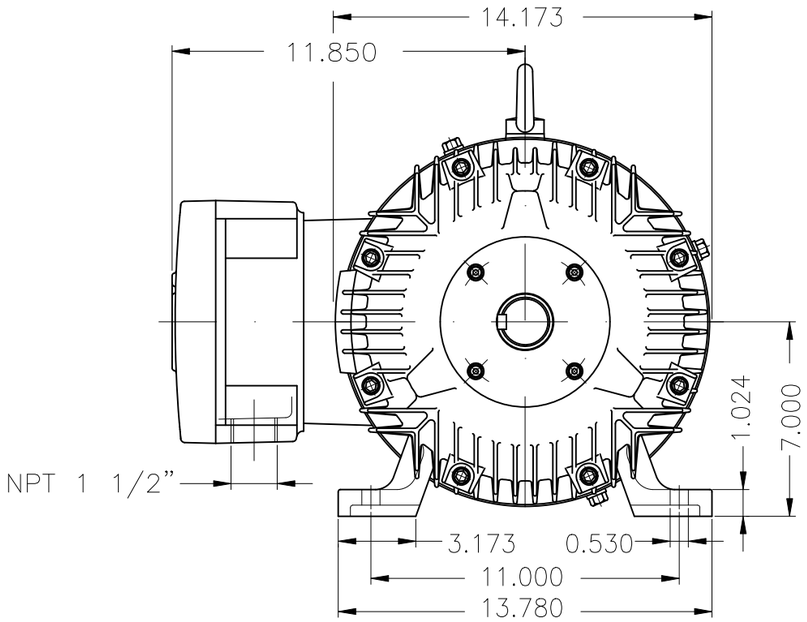

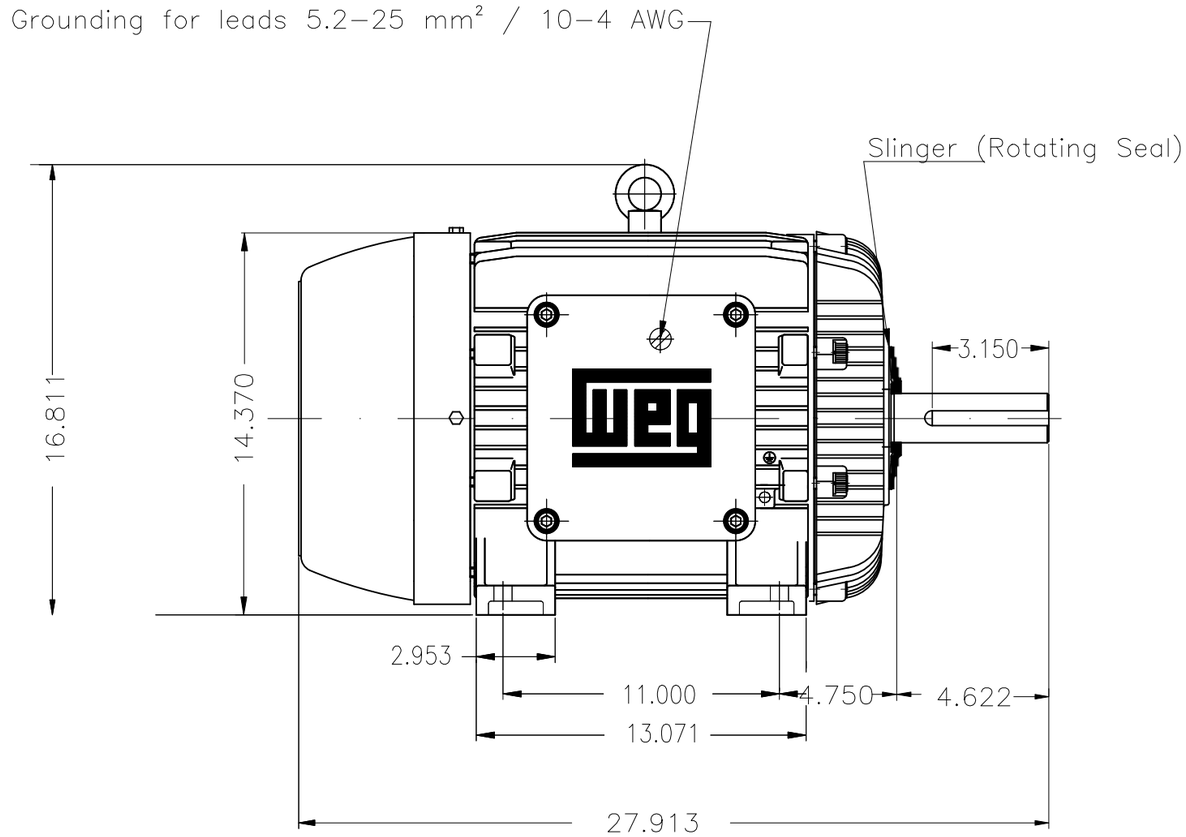

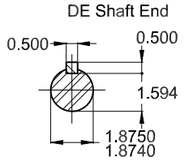

Color RAL 5009

Painting plan 222P

Mounting NEMA F-1

Mounting B3R(D)

30 HP 04 Poles 60 Hz | A

ECM	LOC	SUMMARY OF MODIFICATIONS	EXECUTED	CHECKED	RELEASED	DATE	VER
			HYBRISUSER				00

EXECUTED	HYBRISUSER	THREE PH. MOTOR EXPLOSION PROOF NEMA PREM. EFF.
CHECKED		FRAME 286T IP55 TEFC
RELEASED		
REL. DATE		WMO Jaragua do Sul Product Engineering

PREVIEW

WDD 00

SHEET 1 / 1

Dimensions in inches

A3

XME

WEG's property. Forbidden reproduction without previous authorization.