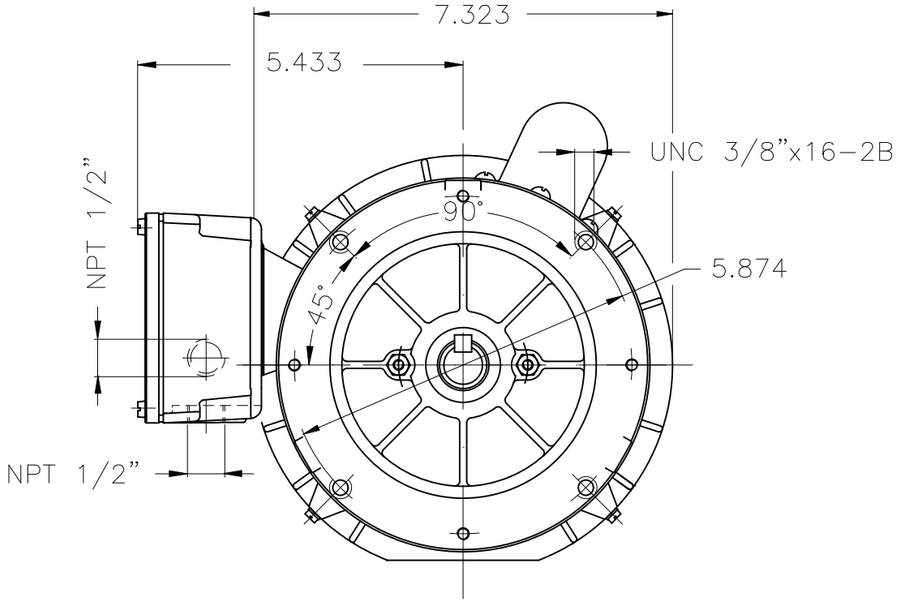


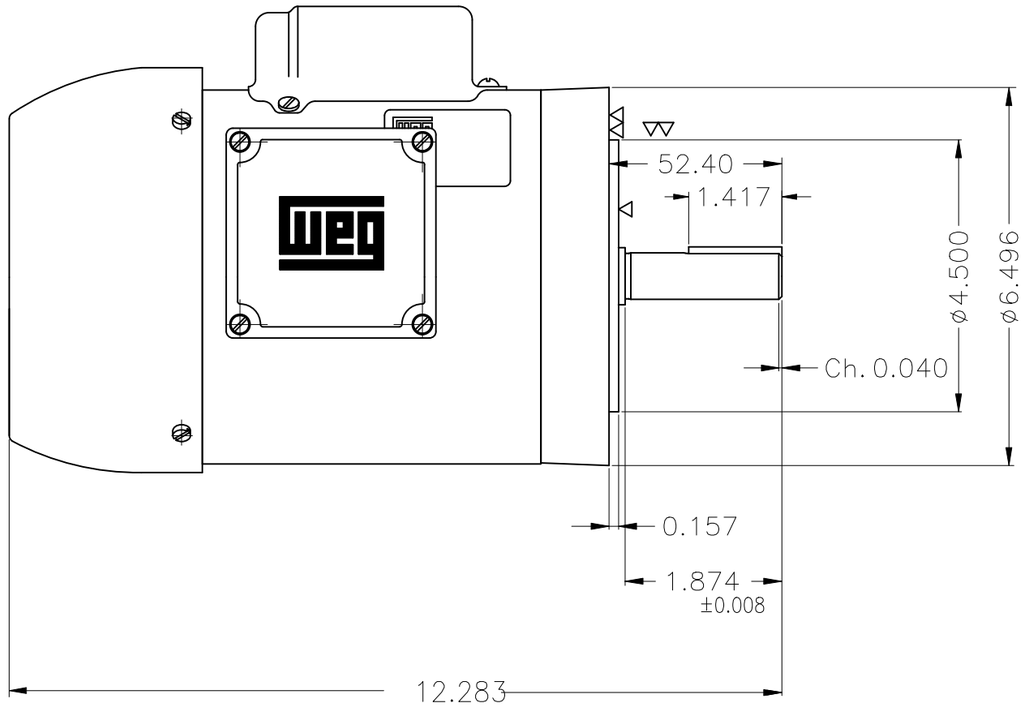


Rotation CW and CCW

Mounting B14R(D)

| ECM | LOC | SUMMARY OF MODIFICATIONS | EXECUTED | CHECKED | RELEASED | DATE | VER |
|---|---|---|---|---|---|---|---|
| | | | HYBRISUSER | | | | 00 |

| | | | |
|---|---|---|---|
| EXECUTED | HYBRISUSER | SINGLE PH. MOTOR CENTRIFUGAL PUMP | PREVIEW |
| CHECKED | | FRAME D56C IP55 TEFC | WDD 00 |
| RELEASED | | | |
| REL. DATE | | WMO Jaragua do Sul Product Engineering | SHEET 1 / 1 |

1.5 HP 02 Poles 60 Hz

A

Dimensions in inches

A3

XME

WEG's property. Forbidden reproduction without previous authorization.