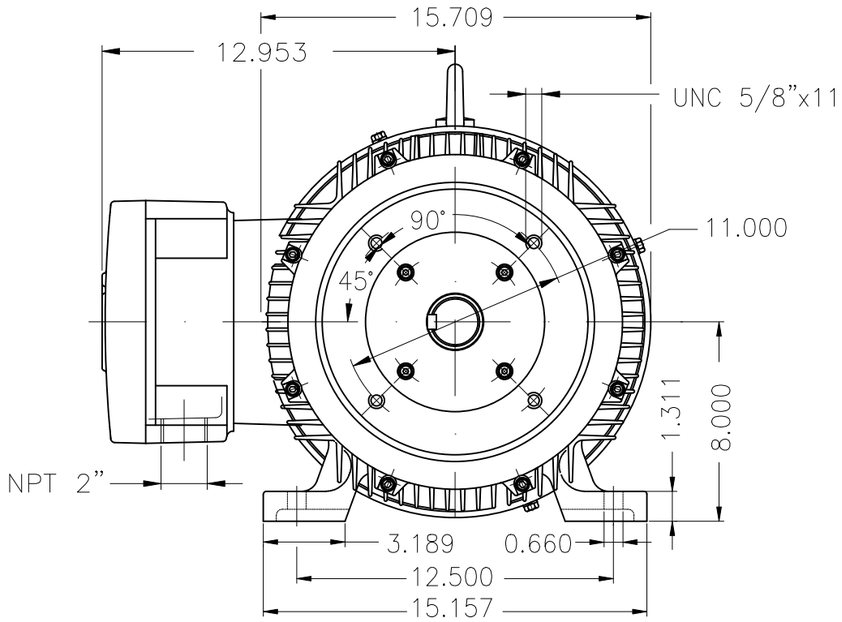

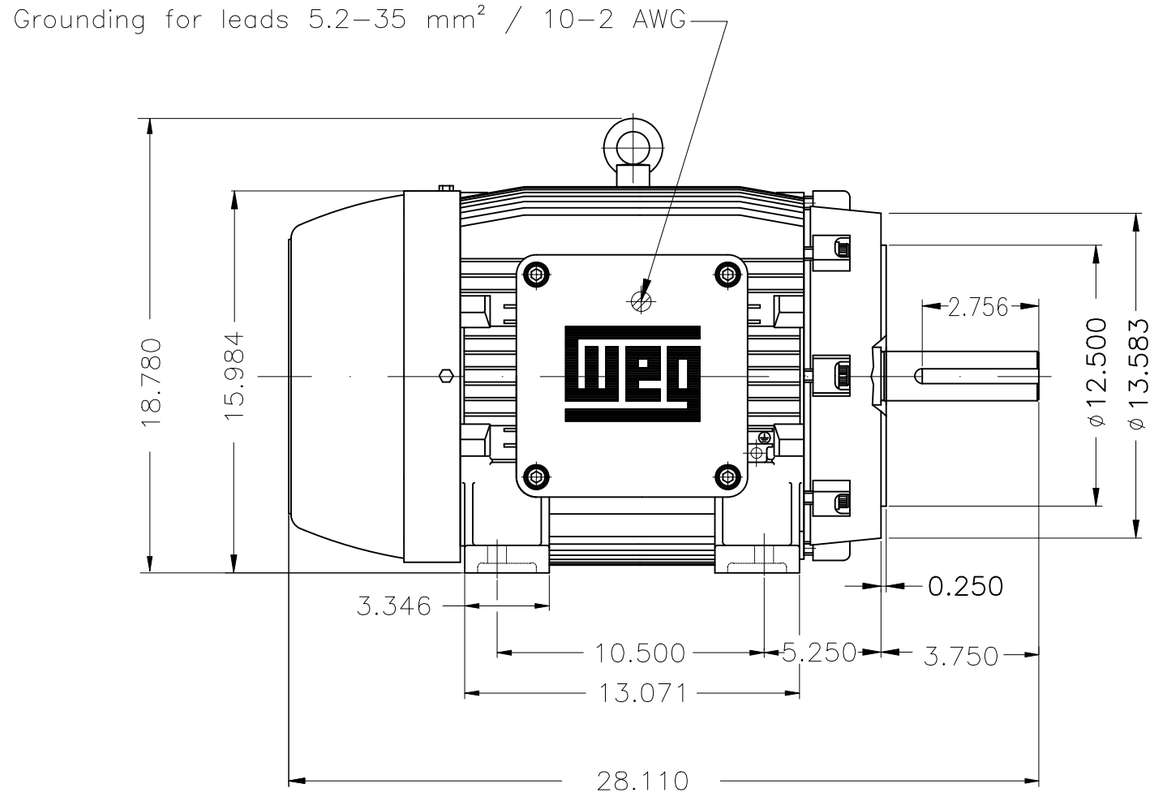

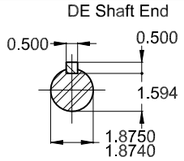

Grease - POLYUREA ESTER OIL
Color RAL 5009
Painting plan 222P
Mounting B34R(D)

40 HP 02 Poles 60 Hz | A

ECM	LOC	SUMMARY OF MODIFICATIONS	EXECUTED	CHECKED	RELEASED	DATE	VER
			HYBRISUSER				00

EXECUTED	HYBRISUSER	THREE PH. MOTOR EXPLOSION PROOF NEMA PREM. EFF.
CHECKED		FRAME 324TSC IP55 TEFC
RELEASED		
REL. DATE		WMO Jaragua do Sul Product Engineering

PREVIEW
WDD 00
SHEET 1 / 1

Dimensions in inches
XME A3

WEG's property. Forbidden reproduction without previous authorization.