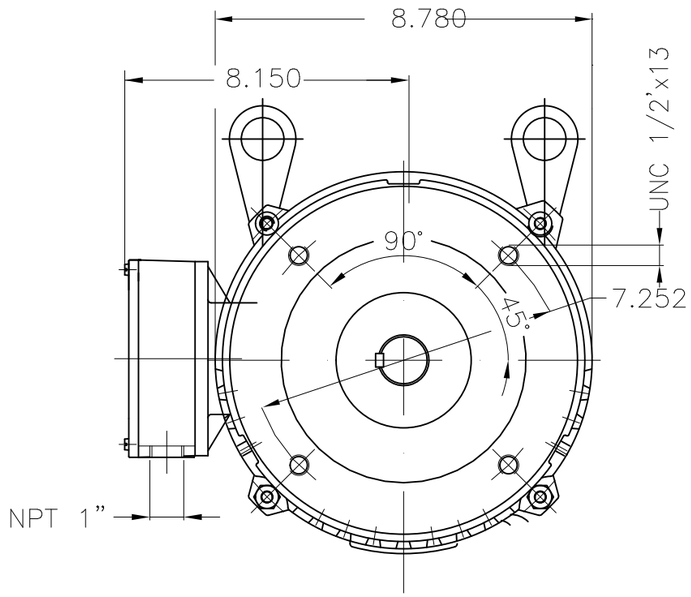

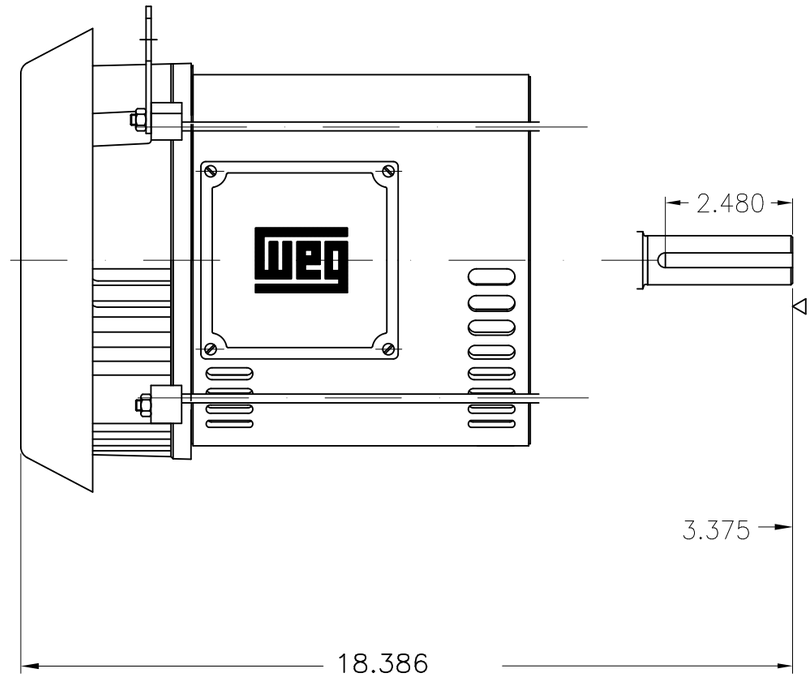

Plastic flat plug
Packing - crate
Color RAL 5009
Painting plan 207A
Mounting V18

DE Shaft End

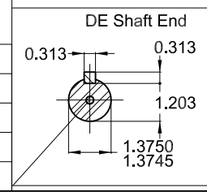

7.5 HP 04 Poles 60 Hz | A

ECM	LOC	SUMMARY OF MODIFICATIONS	EXECUTED	CHECKED	RELEASED	DATE	VER
			HYBRISUSER				00

EXECUTED	HYBRISUSER
CHECKED	
RELEASED	
REL. DATE	

THREE PH. MOTOR GENERAL HIGH EFF.
FRAME 213/5TC IP21 ODP

WMO Jaragua do Sul Product Engineering

PREVIEW

WDD 00

SHEET 1 / 1

Dimensions in inches

XME A3

WEG's property. Forbidden reproduction without previous authorization.