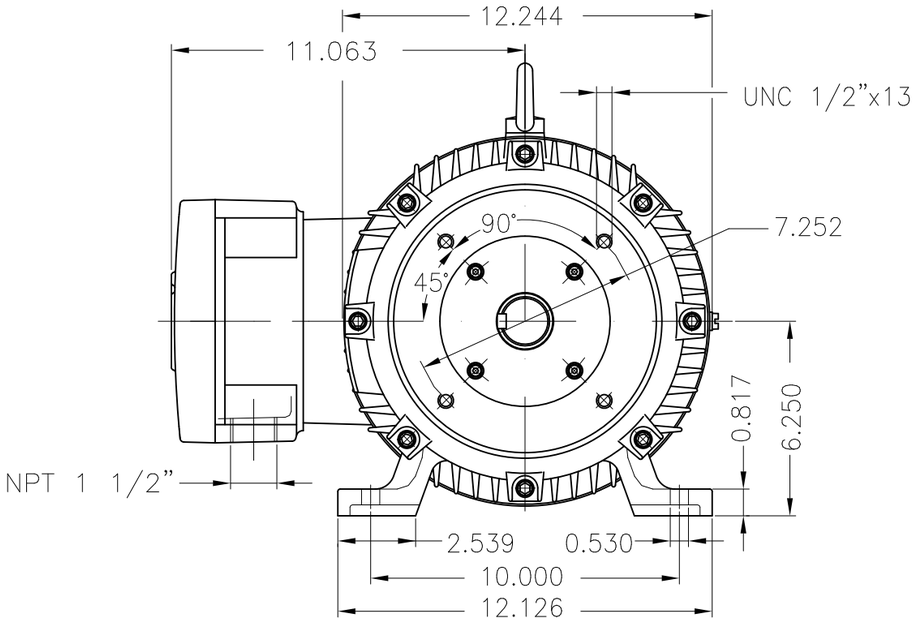

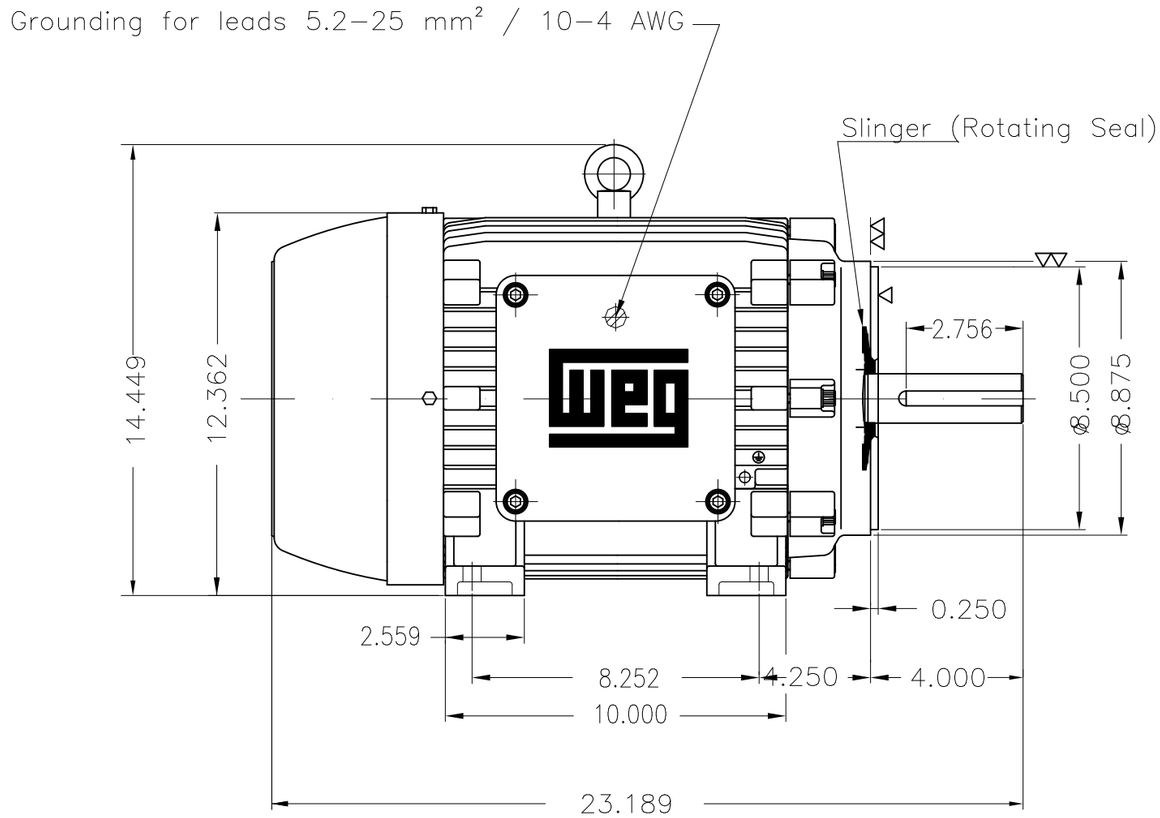

Dimensions in inches

5 HP 08 Poles 60 Hz | A

ECM	LOC	SUMMARY OF MODIFICATIONS	EXECUTED	CHECKED	RELEASED	DATE	VER
			HYBRISUSER				00

- Without Grease fitting
- Color RAL 5009
- Painting plan 222P
- Mounting NEMA F-1
- Mounting B34R(D)

DE Shaft End

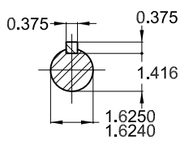

EXECUTED	HYBRISUSER	THREE PH. MOTOR EXPLOSION PROOF NEMA PREM. EFF.
CHECKED		FRAME 254TC IP55 TEFC
RELEASED		
REL. DATE		WMO Jaragua do Sul Product Engineering

PREVIEW

WDD 00

SHEET 1 / 1

XME A3

WEG's property. Forbidden reproduction without previous authorization.