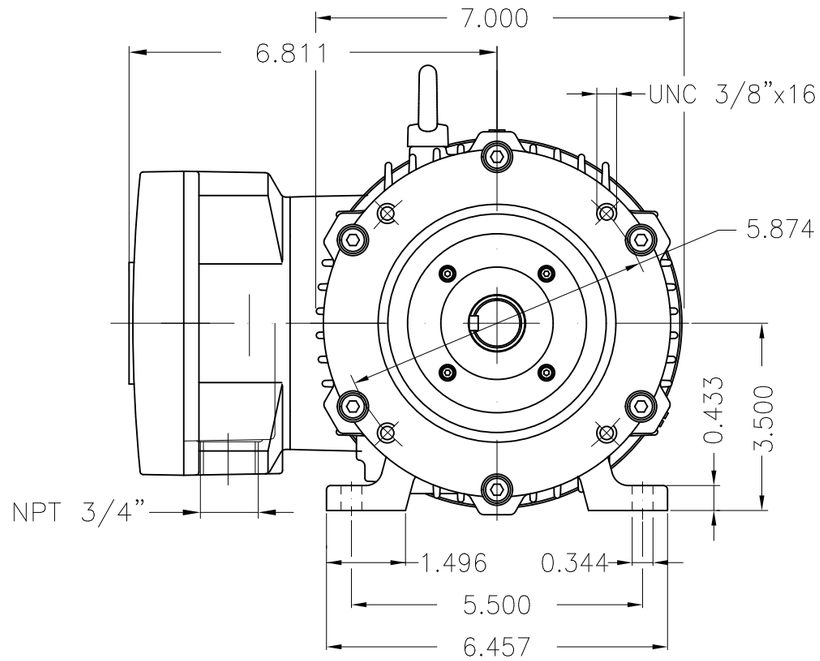

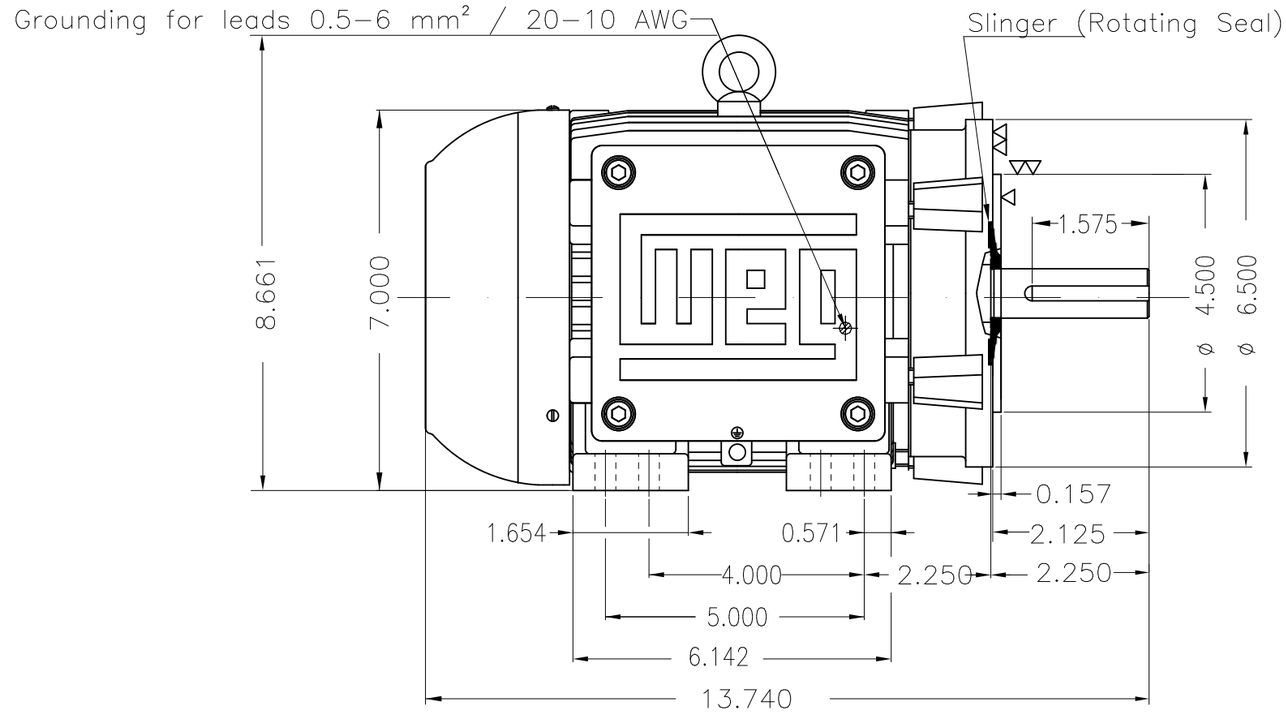

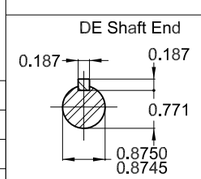

Color RAL 5009

Painting plan 202P

Mounting NEMA F-1

Mounting B34R(D)

1 HP 04 Poles 60 Hz | A

ECM	LOC	SUMMARY OF MODIFICATIONS	EXECUTED	CHECKED	RELEASED	DATE	VER
			HYBRISUSER				00

EXECUTED	HYBRISUSER	THREE PH. MOTOR EXPLOSION PROOF NEMA PREM. EFF.	PREVIEW
CHECKED		FRAME 143/5TC IP55 TEFC	WDD 00
RELEASED			
REL. DATE		WMO Jaragua do Sul Product Engineering	SHEET 1 / 1

Dimensions in inches

XME A3

WEG's property. Forbidden reproduction without previous authorization.