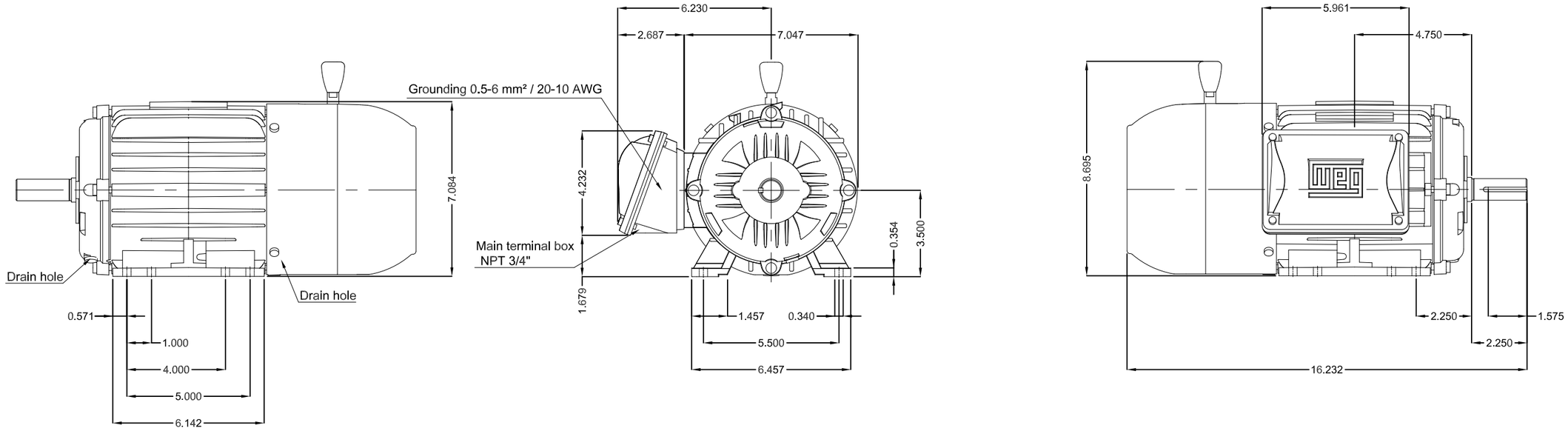

Brake voltage 525-575 V	
With brake 10 (16 Nm)	
Color RAL 5009	
Painting plan 207A	
Mounting NEMA F-1	
Mounting B3R(D)	

DE Shaft End

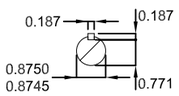

1 HP 04 Poles 60 Hz | A

ECM	LOC	SUMMARY OF MODIFICATIONS	HYBRISUSER EXECUTED	CHECKED	RELEASED	DATE	VER
			HYBRISUSER				00

EXECUTED	HYBRISUSER
CHECKED	
RELEASED	
REL. DATE	

THREE PH. MOTOR W22 BRAKE MOTOR NEMA PREM. EFF.
FRAME 143/5T IP55 TEFC

PREVIEW

WDD 00

SHEET /

Dimensions in inches

A3

WEG's property. Forbidden reproduction without previous authorization.