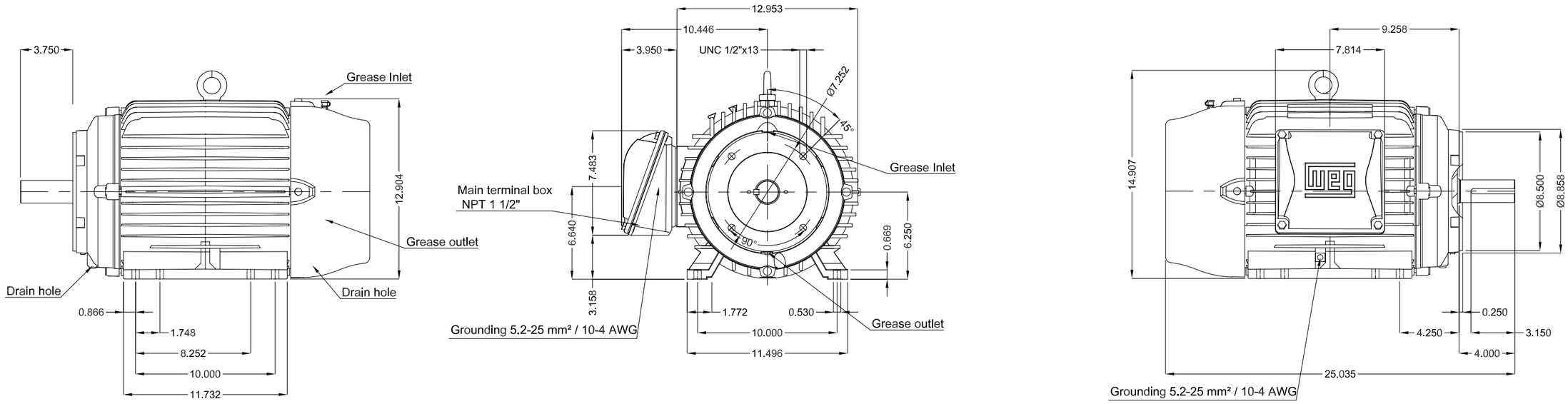


Without vertical jackscrews
Sealing - Taconite labyrinth
Grease outlet according to IEEE841
Color RAL 5009
Painting plan 222E
Mounting NEMA F-1
Mounting B34R(D)

DE Shaft End

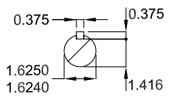


15 HP 04 Poles 60 Hz | A

| ECM | LOC | SUMMARY OF MODIFICATIONS | EXECUTED | CHECKED | RELEASED | DATE | VER |
|---|---|---|---|---|---|---|---|
| | | | HYBRISUSER | | | | 00 |

| | |
|---|---|
| EXECUTED | HYBRISUSER |
| CHECKED | |
| RELEASED | |
| REL. DATE | |

THREE PH. MOTOR IEEE 841 W22 NEMA PREM. EFF.
FRAME 254/6TC IP55 TEFC

PREVIEW
WDD 00
SHEET /

Dimensions in inches

A3

WEG's property. Forbidden reproduction without previous authorization.