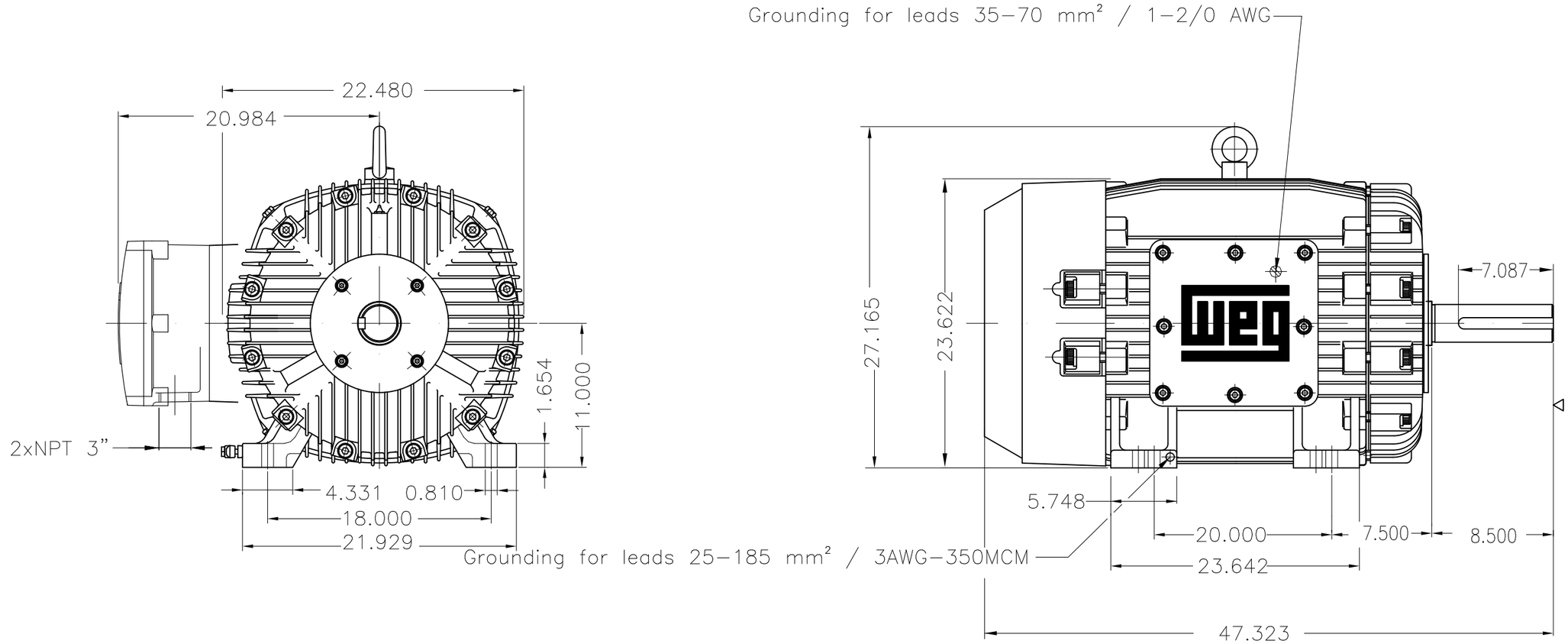

Thermal protection to alarm - thermostat 130°C
DE roller bearing
Shaft locking device
Color RAL 5009
Painting plan 202P
Mounting NEMA F-1
Mounting B3D

DE Shaft End

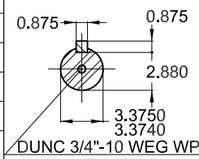

DUNC 3/4"-10 WEG WPR-7339

200 HP 04 Poles 60 Hz | A

ECM	LOC	SUMMARY OF MODIFICATIONS	EXECUTED	CHECKED	RELEASED	DATE	VER

EXECUTED DATAVIEWERUSER
CHECKED
RELEASED
REL DT.

THREE PH. MOTOR EXPLOSION PROOF PREM. EFF.
FRAME 447T IP55 TEFC

WMO Jaragua do Sul Product Engineering

PREVIEW
WDD
SHEET 1 / 1

Dimensions in inches

XME A3

WEG's property. Forbidden reproduction without previous authorization.