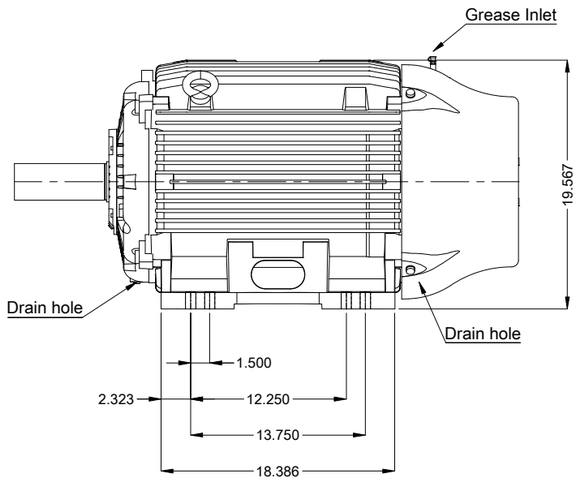

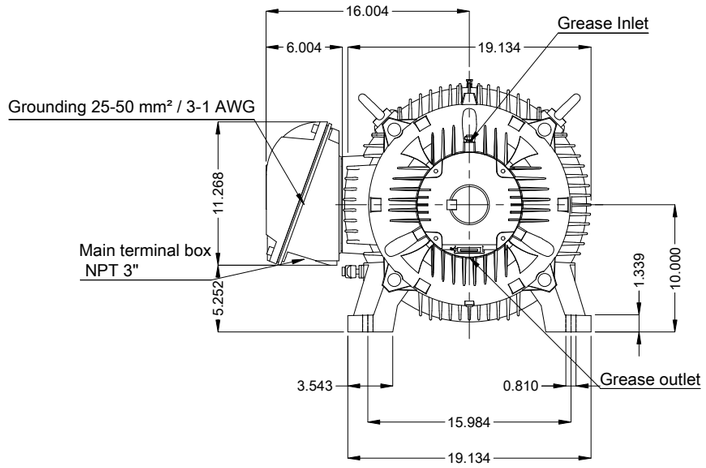

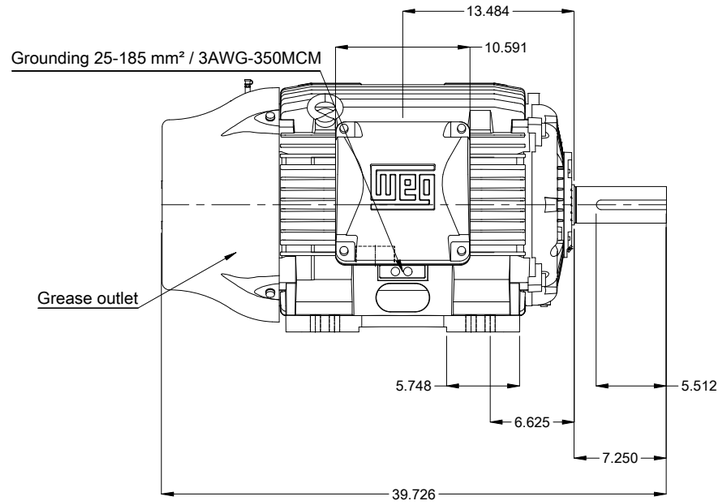

Without vertical jackscrews
Shaft locking device
DE roller bearing
Color RAL 5009
Painting plan 203A
Mounting B3R(D)

DE Shaft End

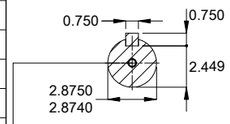

DUNC 3/4"-10 WEG WPR-7339

100 HP 04 Poles 60 Hz | A

Scale 1 : 12

ECM	LOC	SUMMARY OF MODIFICATIONS	EXECUTED	CHECKED	RELEASED	DATE	VER
			HYBRISUSER				00

EXECUTED	HYBRISUSER
CHECKED	
RELEASED	
REL. DATE	

THREE PH. MOTOR W22 NEMA PREM. EFF.
FRAME 404/5T IP55 TEFC

PREVIEW

WDD 00

SHEET 1 / 1

Dimensions in inches

A3

WEG's property. Forbidden reproduction without previous authorization.