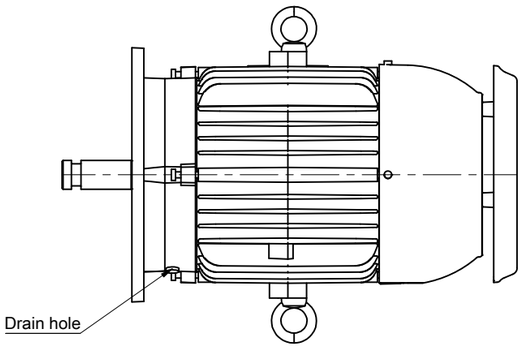

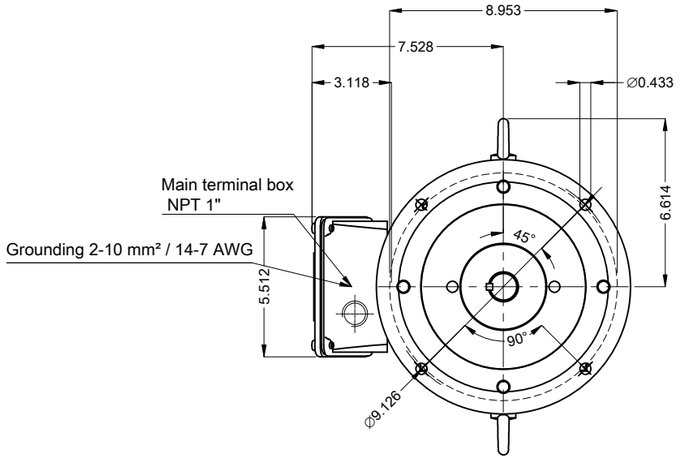

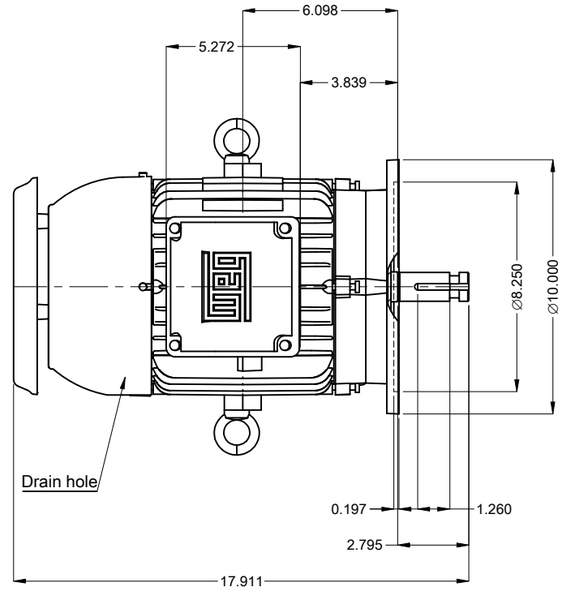

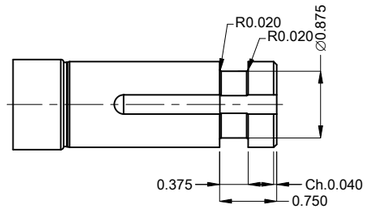

DE Shaft End

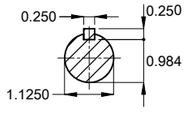

With drip cover
Color RAL 5009
Painting plan 207A
Mounting NEMA W-6
Mounting V1

1.5 HP 06 Poles 60 Hz | A

Scale 1 : 6

ECM	LOC	SUMMARY OF MODIFICATIONS	EXECUTED	CHECKED	RELEASED	DATE	VER
			HYBRISUSER				00

EXECUTED	HYBRISUSER	THREE PH. MOTOR W22 P. BASE NEMA PREM. EFF.	PREVIEW
CHECKED		FRAME 182HP IP55 TEFC	WDD 00
RELEASED			SHEET 1 / 1
REL. DATE			

Dimensions in inches

A3

WEG's property. Forbidden reproduction without previous authorization.