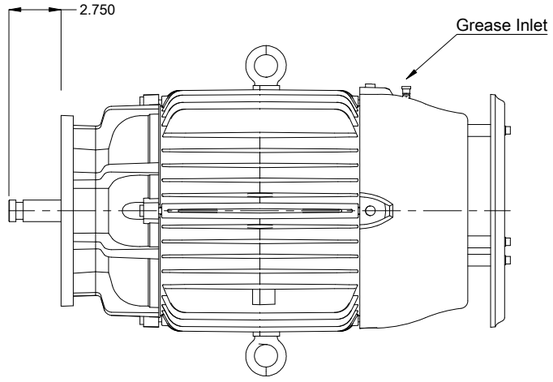

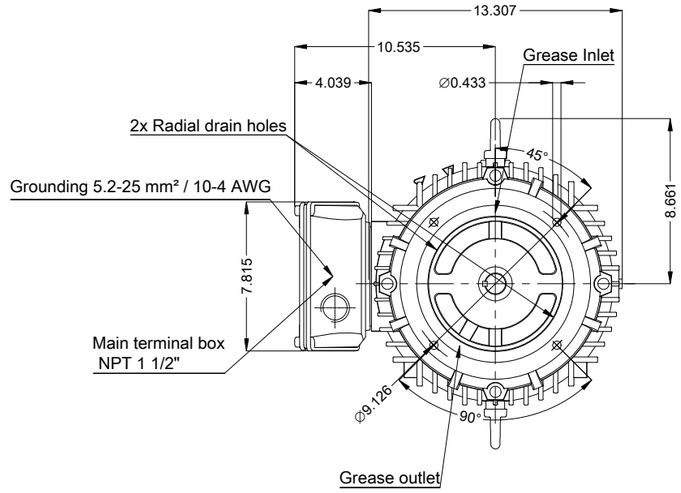

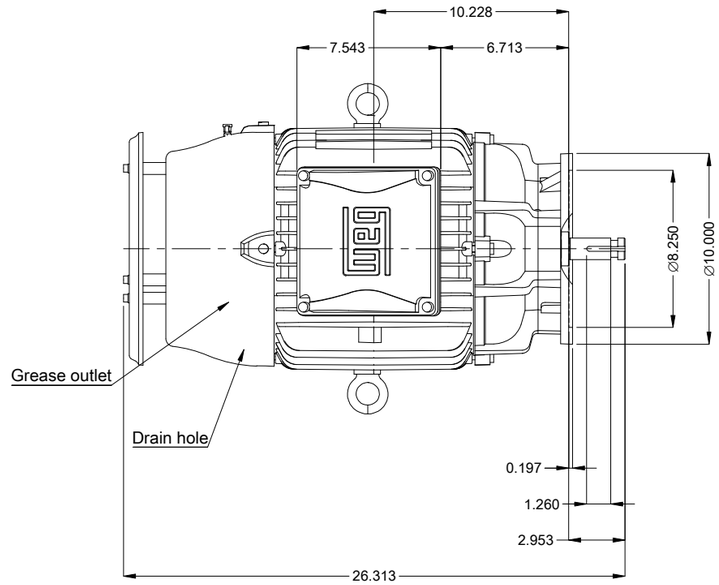

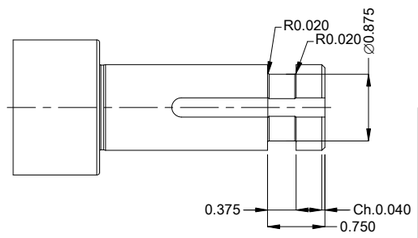

DE Shaft End

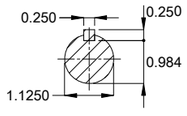

Without vertical jackscrews
With drip cover
Color RAL 5009
Painting plan 203A
Mounting NEMA W-6
Mounting V1

15 HP 02 Poles 60 Hz | A

Scale 1 : 8

ECM	LOC	SUMMARY OF MODIFICATIONS	EXECUTED	CHECKED	RELEASED	DATE	VER
			HYBRISUSER				00

EXECUTED	HYBRISUSER
CHECKED	
RELEASED	
REL. DATE	

THREE PH. MOTOR W22 P. BASE NEMA PREM. EFF.
FRAME 254HP IP55 TEFC

PREVIEW

WDD 00

SHEET 1 / 1

Dimensions in inches

A3

WEG's property. Forbidden reproduction without previous authorization.