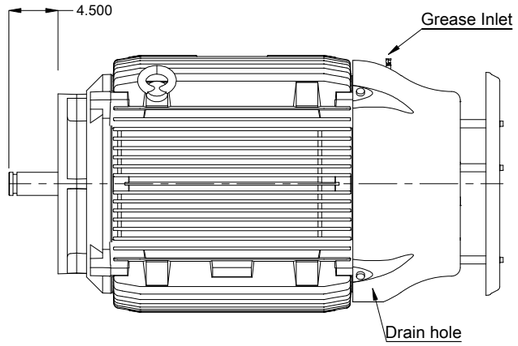

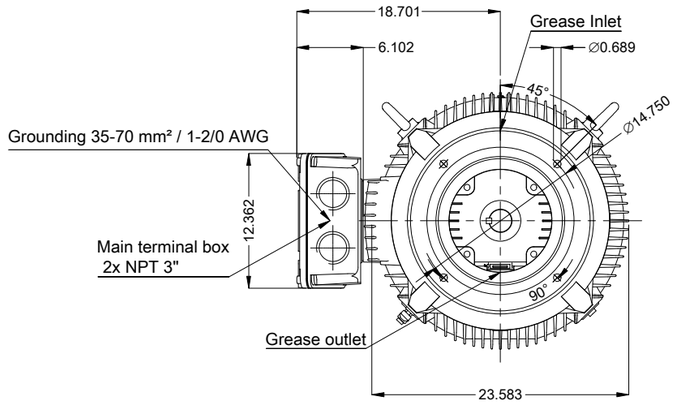

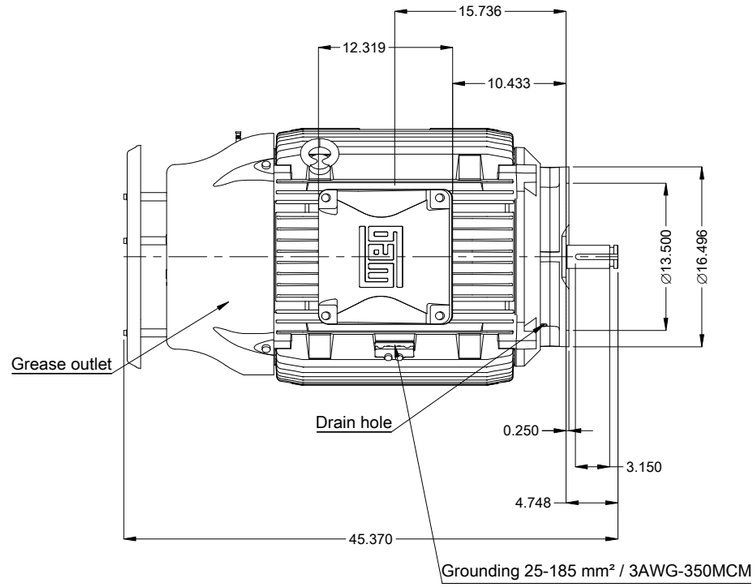

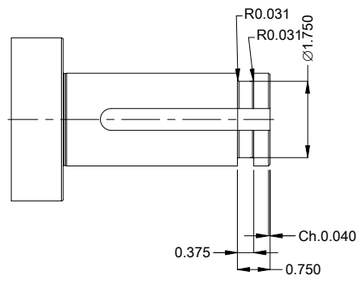

DE Shaft End

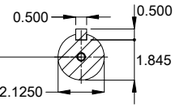

DUNC 5/8"-11 WEG WPR-7339

Without vertical jackscrews
With drip cover
Color RAL 5009
Painting plan 203A
Mounting NEMA W-6
Mounting V1

150 HP 04 Poles 60 Hz | A

Scale 1 : 14

ECM	LOC	SUMMARY OF MODIFICATIONS	EXECUTED	CHECKED	RELEASED	DATE	VER
			HYBRISUSER				00

EXECUTED	HYBRISUSER
CHECKED	
RELEASED	
REL. DATE	

THREE PH. MOTOR W22 P. BASE NEMA PREM. EFF.
FRAME 444/5HP IP55 TEFC

PREVIEW

WDD 00

SHEET 1 / 1

Dimensions in inches

A3

WEG's property. Forbidden reproduction without previous authorization.