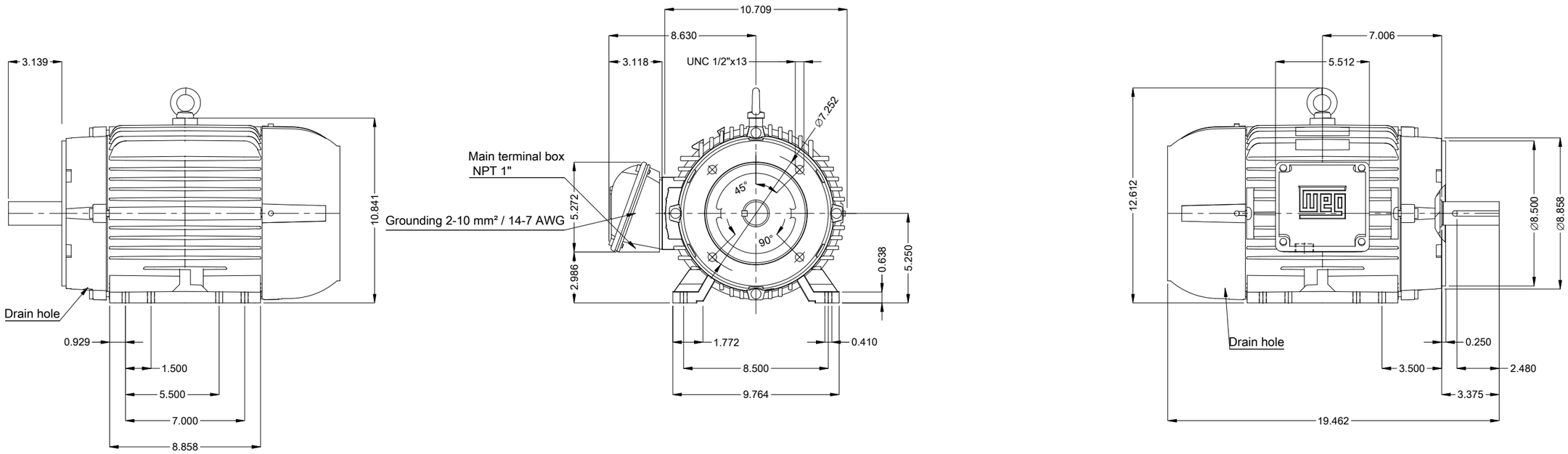


DE Shaft End

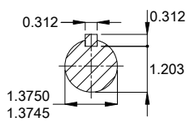


Color RAL 5009

Painting plan 207A

Mounting NEMA F-1

Mounting B34D

7.5 HP 04 Poles 60 Hz | A

Scale 2 : 13

| ECM | LOC | SUMMARY OF MODIFICATIONS | EXECUTED | CHECKED | RELEASED | DATE | VER |
|---|---|---|---|---|---|---|---|
| | | DATAVIEWERUSER | | | | | 00 |

EXECUTED DATAVIEWERUSER

CHECKED

RELEASED

REL. DATE

THREE PH. MOTOR W22 NEMA PREM. EFF.

FRAME 213/5TC IP55 TEFC

PREVIEW

WDD 00

SHEET 1 / 1

Dimensions in inches

A3

WEG's property. Forbidden reproduction without previous authorization.