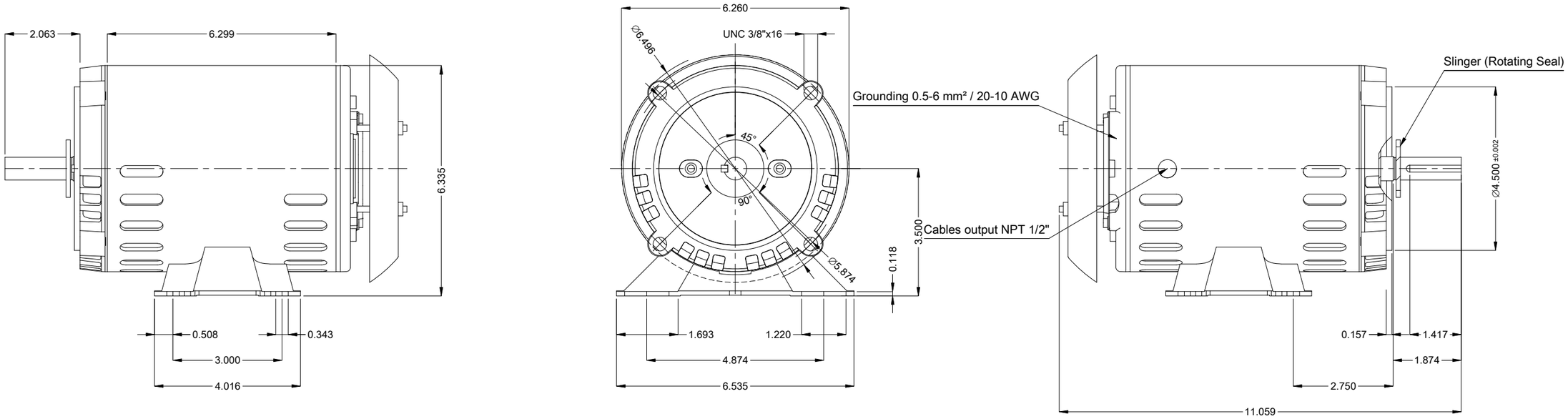

Shaft material - stainless steel AISI 304
With drip cover
Color Munsell N 1 matte black
Painting plan 207N
Mounting MARKET W-6/V17R(D)
Mounting W-6/V17R(D)

DE Shaft End

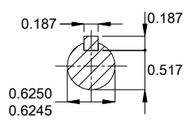

0.5 HP 02 Poles 60 Hz | A

V.J. PAMENSKY CANADA INC.

Scale 1 : 3

ECM	LOC	SUMMARY OF MODIFICATIONS	EXECUTED	CHECKED	RELEASED	DATE	VER
			PIRWBUSER				00

EXECUTED	PIRWBUSER
CHECKED	
RELEASED	
REL. DATE	

THREE PH. MOTOR ROLLED STEEL JET PUMP KEYED PREM. EFF
FRAME W56C IP21 ODP

PREVIEW

WDD 00

SHEET 1 / 1

Dimensions in inches

A3

WEG's property. Forbidden reproduction without previous authorization.