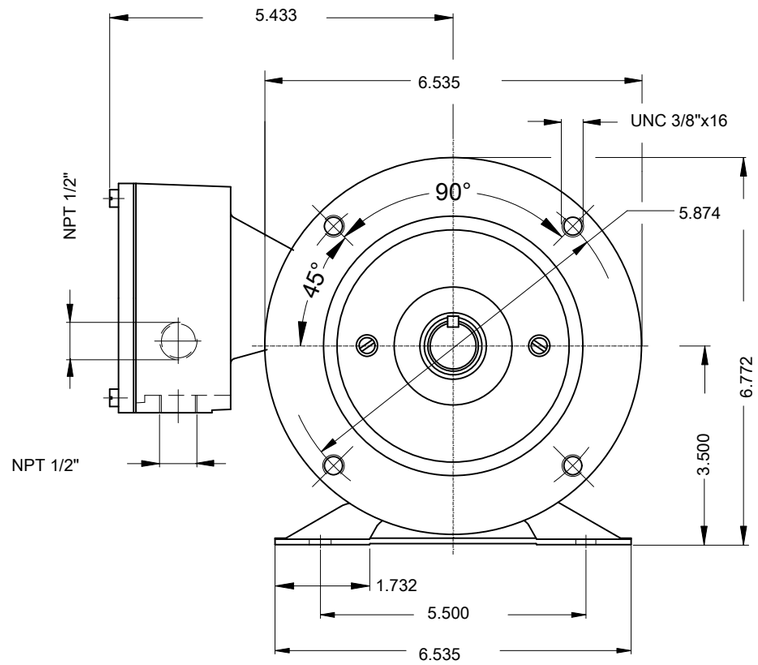

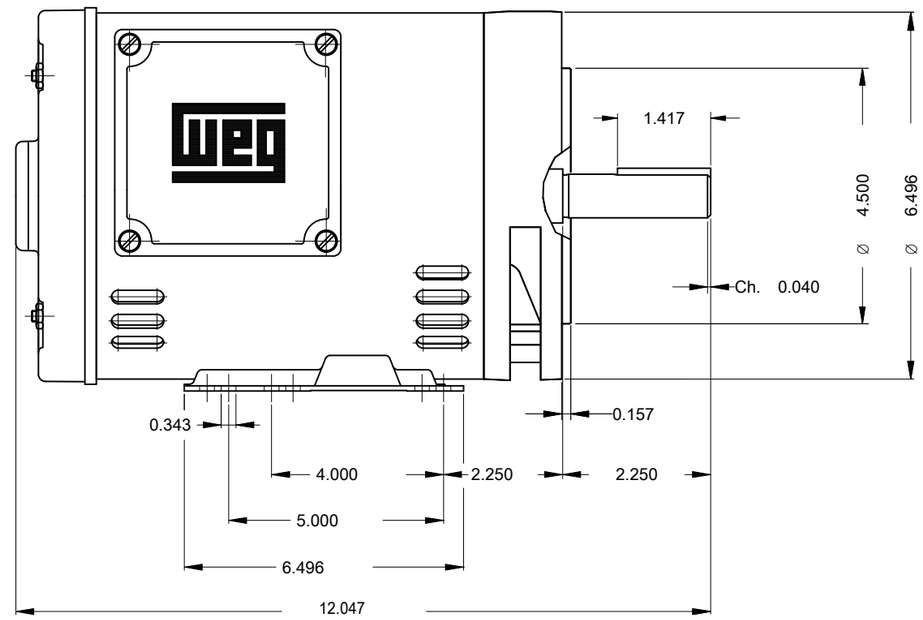

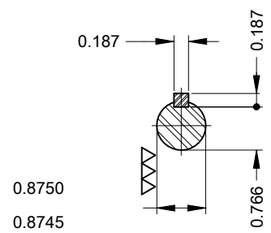

Mounting B34D

ECM	LOC	SUMMARY OF MODIFICATIONS	EXECUTED	CHECKED	RELEASED	DATE	VER
			DATAVIEWERUSER				00

EXECUTED DATAVIEWERUSER
CHECKED
RELEASED
REL. DATE

THREE PH. MOTOR GENERAL HIGH EFF.
FRAME E143/5TC IP21 ODP

PREVIEW
WDD 00

WMO Jaragua do Sul Product Engineering

SHEET 1 / 1

1.5 HP 02 Poles 60 Hz

A

Dimensions in inches

XME A3

WEG's property. Forbidden reproduction without previous authorization.