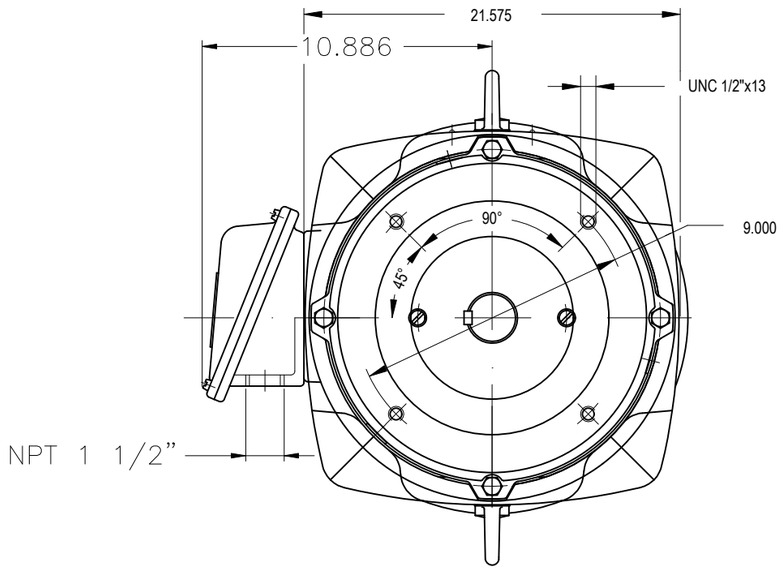


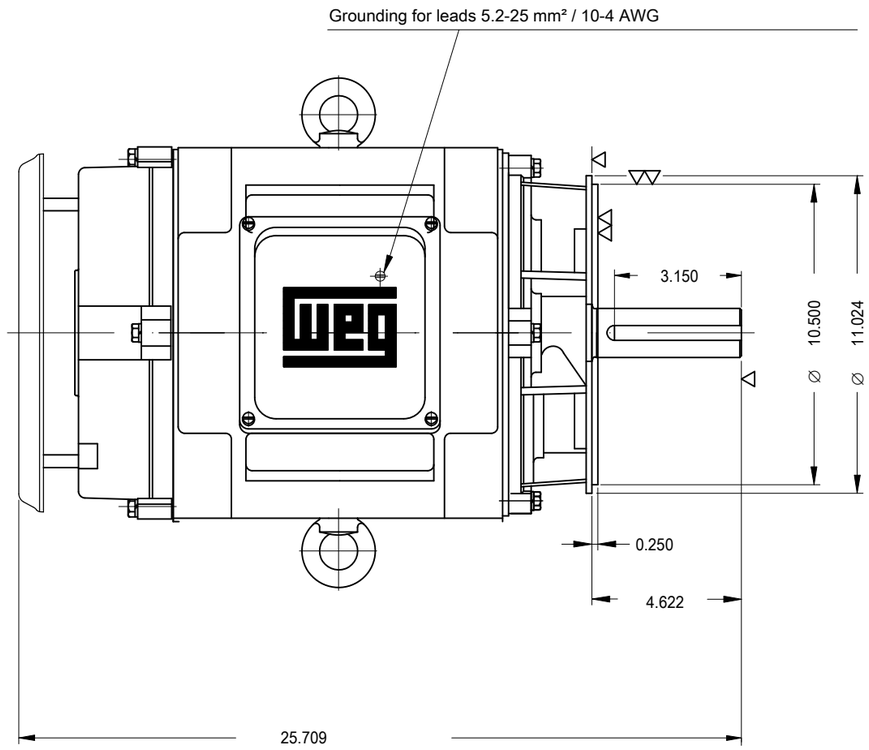


DE Shaft End

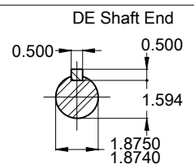


With drip cover
Color RAL 5009
Painting plan 203A
Mounting B14R(D)

25 HP 04 Poles 60 Hz | A

| ECM | LOC | SUMMARY OF MODIFICATIONS | EXECUTED | CHECKED | RELEASED | DATE | VER |
|---|---|---|---|---|---|---|---|
| | | | HYBRISUSER | | | | 00 |

| | | | |
|---|---|---|---|
| EXECUTED | HYBRISUSER | THREE PH. MOTOR GENERAL HIGH EFF. | PREVIEW |
| CHECKED | | FRAME 284TC IP23 ODP | WDD 00 |
| RELEASED | | | |
| REL. DATE | | WMO Jaragua do Sul Product Engineering | SHEET 1 / 1 |

Dimensions in inches

XME A3

WEG's property. Forbidden reproduction without previous authorization.