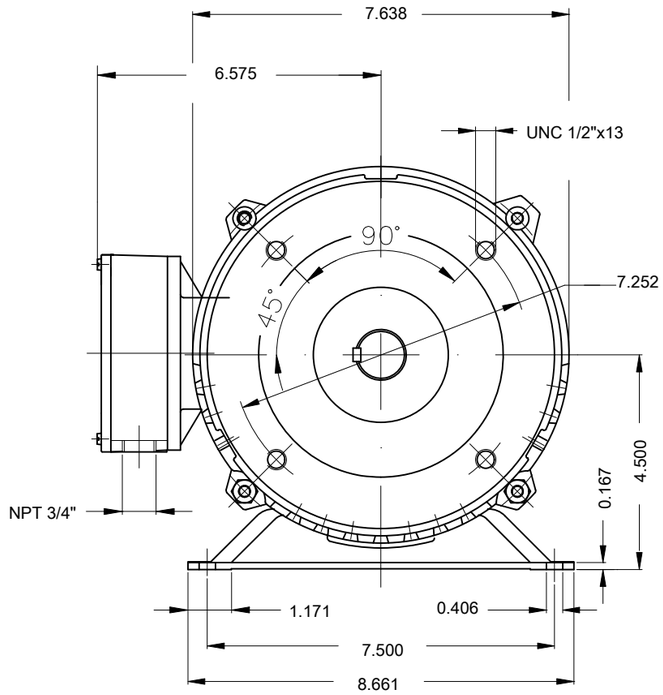

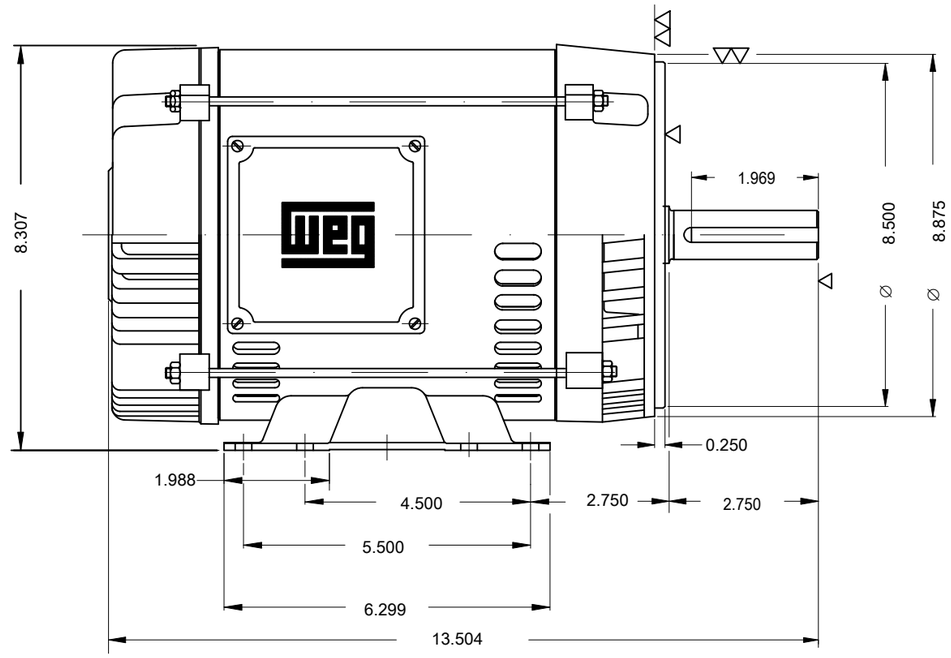

Dimensions in inches

5 HP 02 Poles 60 Hz | A

DE Shaft End

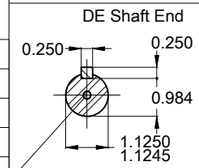

- Bearing cap
- Without switch off thermal protection
- Color RAL 5009
- Painting plan 207A
- Mounting B34D

ECM	LOC	SUMMARY OF MODIFICATIONS	EXECUTED	CHECKED	RELEASED	DATE	VER
			HYBRISUSER				00

EXECUTED	HYBRISUSER	THREE PH. MOTOR GENERAL HIGH EFF.	PREVIEW
CHECKED		FRAME 182TC IP21 ODP	WDD 00
RELEASED			
REL. DATE		WMO Jaragua do Sul Product Engineering	SHEET 1 / 1

XME A3

WEG's property. Forbidden reproduction without previous authorization.