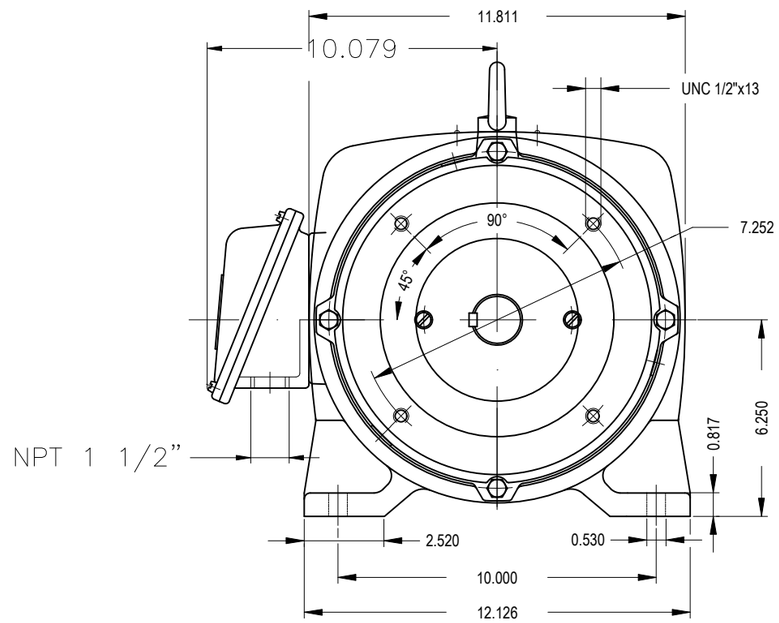

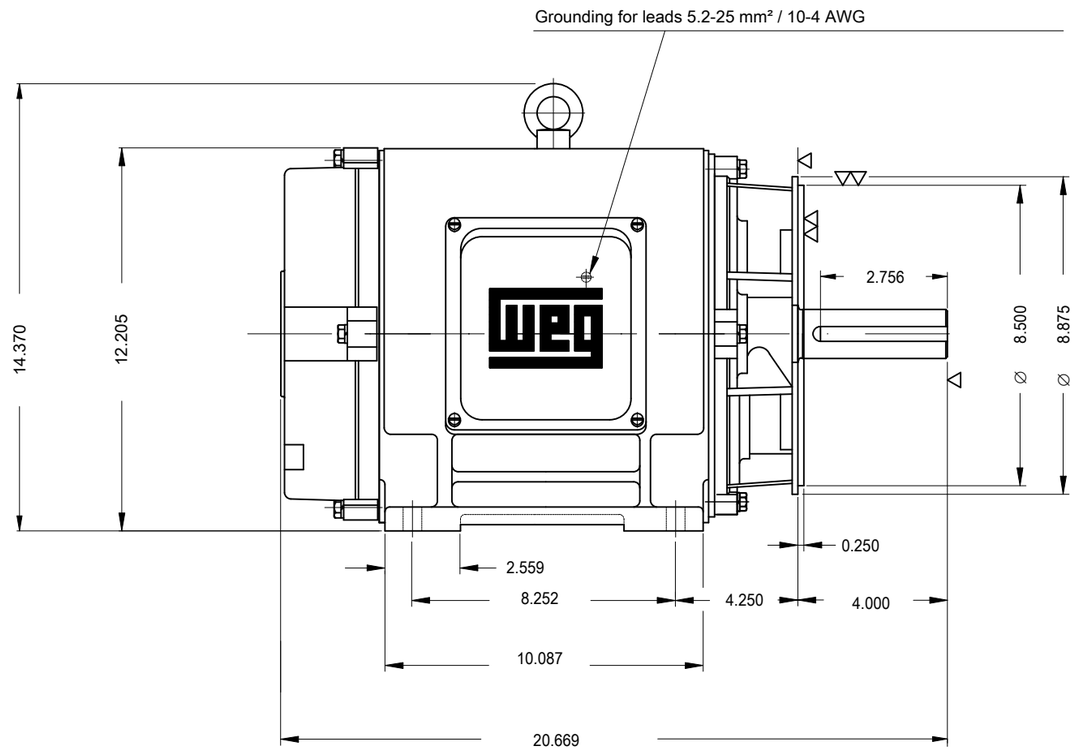

Certification UL/FIRE PUMP
Color RAL 5009
Painting plan 203A
Mounting NEMA F-1
Mounting B34D

DE Shaft End

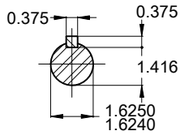

20 HP 02 Poles 60 Hz | A

ECM	LOC	SUMMARY OF MODIFICATIONS	EXECUTED	CHECKED	RELEASED	DATE	VER
			HYBRISUSER				00

EXECUTED	HYBRISUSER	THREE PH. MOTOR GENERAL HIGH EFF.	PREVIEW
CHECKED		FRAME 254TC IP23 ODP	WDD 00
RELEASED			
REL. DATE		WMO Jaragua do Sul Product Engineering	SHEET 1 / 1

Dimensions in inches

XME A3

WEG's property. Forbidden reproduction without previous authorization.