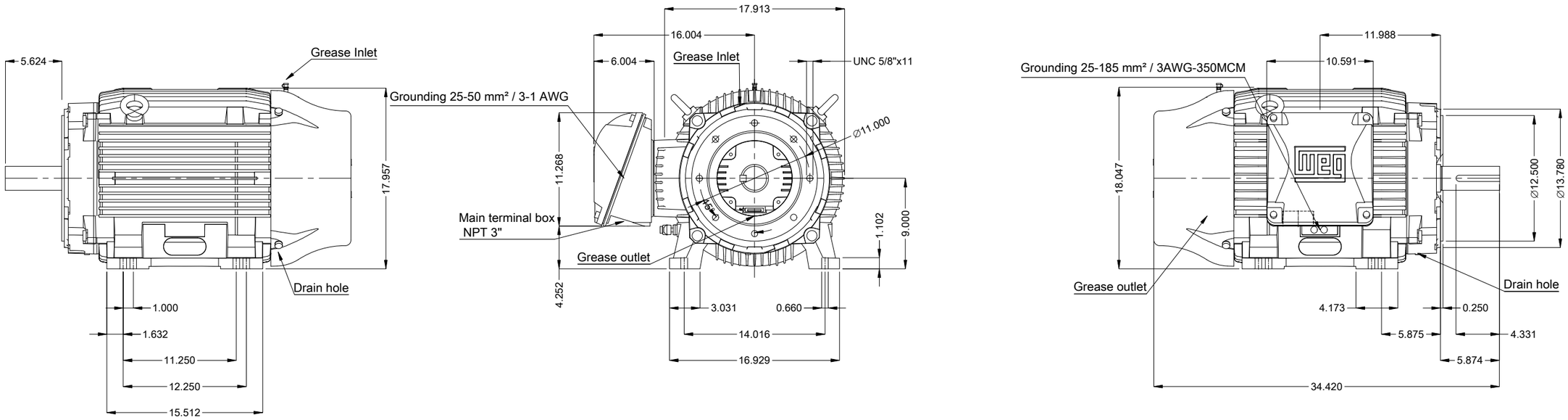

Sealing - oil seal ring
Color RAL 5009
Painting plan 203A
Mounting NEMA F-1
Mounting B34D

DE Shaft End

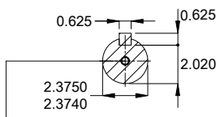

DUNC 3/4"-10 WEG WPR-7339

75 HP 04 Poles 60 Hz | A

Scale 1 : 11

ECM	LOC	SUMMARY OF MODIFICATIONS	EXECUTED	CHECKED	RELEASED	DATE	VER
			HYBRISUSER				00

EXECUTED	HYBRISUSER	THREE PH. MOTOR W22 NEMA PREM. EFF.
CHECKED		FRAME 364/5TC IP55 TEFC
RELEASED		
REL. DATE		

PREVIEW

WDD 00

SHEET 1 / 1

Dimensions in inches

A3

WEG's property. Forbidden reproduction without previous authorization.