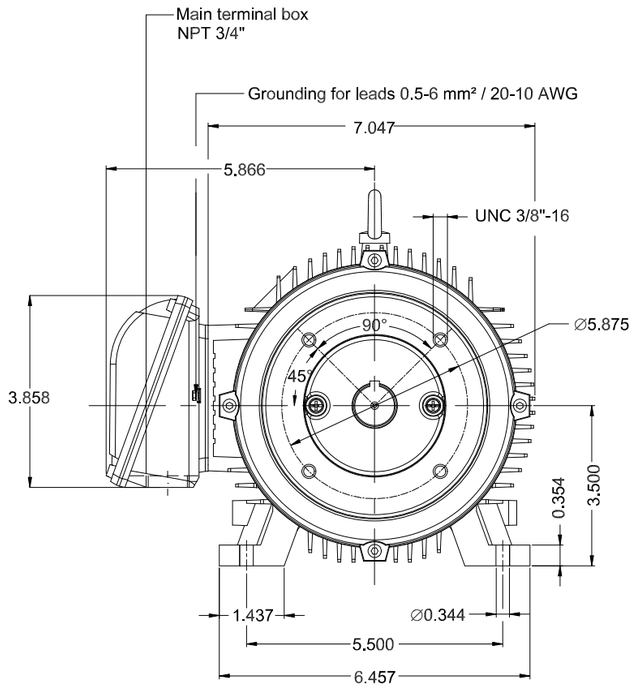

DRIVE END

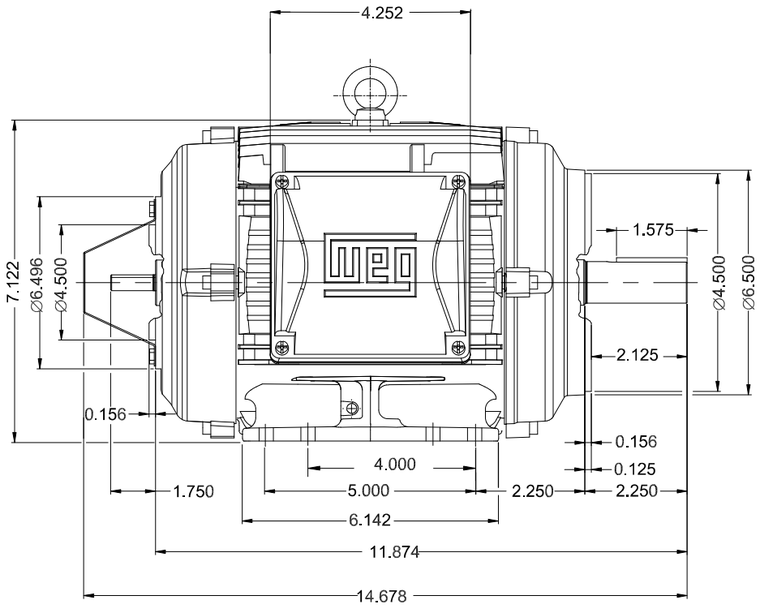

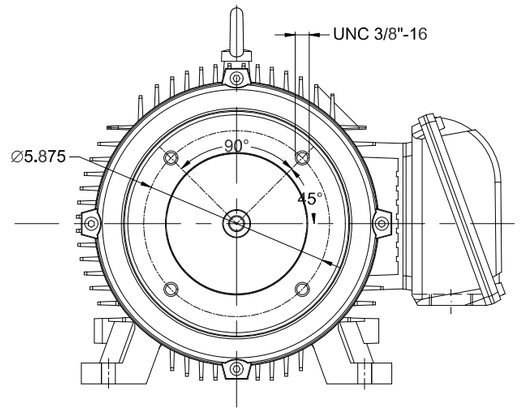

NON DRIVE END

Without fan
Bearing cap
Thermal protection to switch off - thermostat 155°C
Without fan cover
Color RAL 5009
Painting plan 207A
Service factor 1.0
Mounting NEMA F-1
Mounting B34D

DE Shaft End

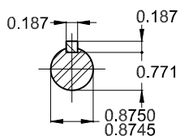

NDE Shaft End

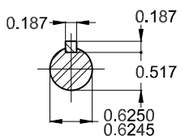

1.5 HP 04 Poles 60 Hz | A

V.J. PAMENSKY CANADA INC.

ECM	LOC	SUMMARY OF MODIFICATIONS	EXECUTED	CHECKED	RELEASED	DATE	VER
		INITIAL ISSUE	BARRAZA	IGNACIOS	RIOMIGUEL	17.01.2025	00

EXECUTED	BARRAZA	THREE PH. MOTOR W22 NEMA PREM. EFF.
CHECKED	IGNACIOS	FRAME 143/5TCZ IP55 TENV
RELEASED	RIOMIGUEL	
REL. DATE	17.01.2025	WEG HUEHUETOCA [Ventas Exportacion]

1634871477

WDD 00

SHEET 1 / 1

Dimensions in inches

XME A3

WEG's property. Forbidden reproduction without previous authorization.

10012920266-00