| EJE/SHAFT | |
|---|---|
| ESTÁNDAR/STANDARD | |
| OPCIONAL/OPTIONAL | |
| ESPECIAL/SPECIAL | X |

Dimensões em polegada
Dimensions in inches

CERTIFIED
WEG MOTORES
Certified document.
Not subject to changes.

THIS IS AN UPDATED REVISION, THE PREVIOUS ONE MUST BE DISREGARDED.

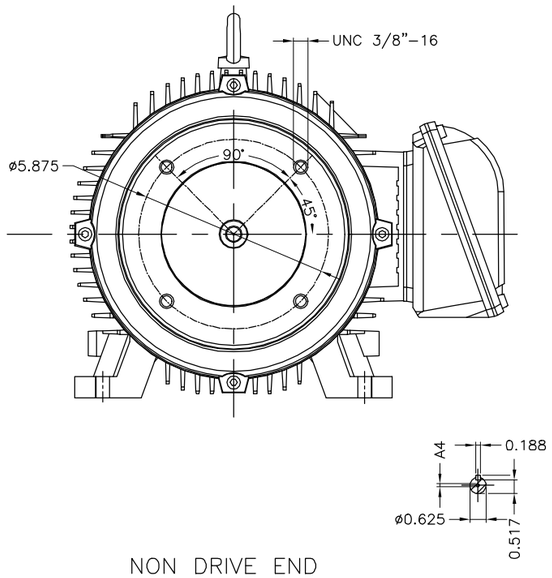


NON DRIVE END

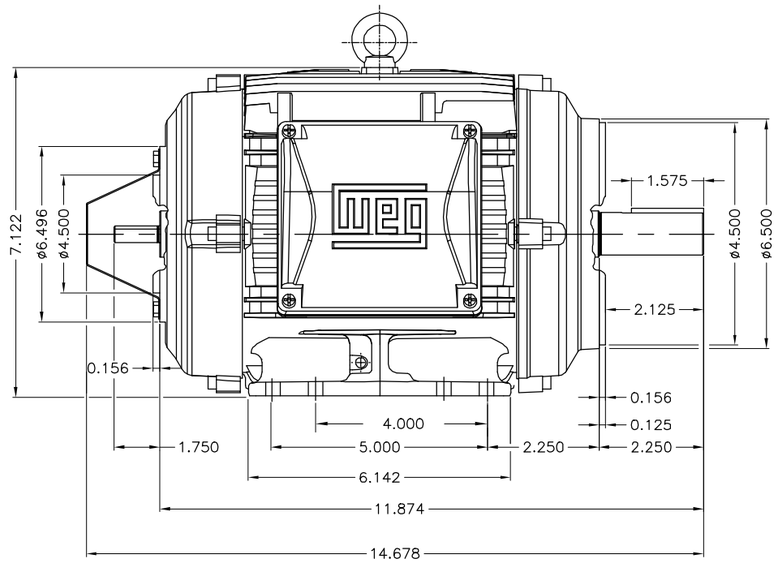


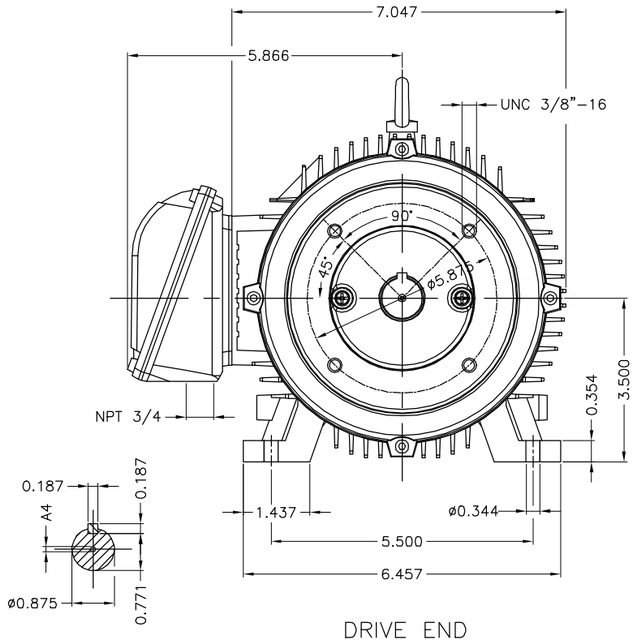


DRIVE END

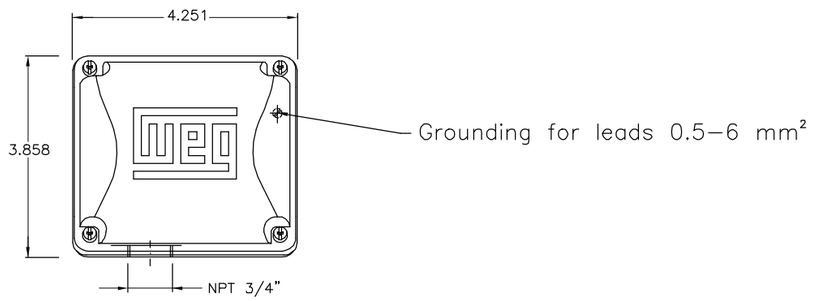


Main terminal box

Sin deflectora / Without fan cover
Anillo fijación del rodamiento / Bearing cap
Sin ventilador / Without fan
Color RAL 5009 / Color RAL 5009
Plan de pintura 207A / Painting plan 207A
Forma constructiva NEMA F-1 / Mounting NEMA F-1
Forma constructiva B34D / Mounting B34R(D)

OV: 4302353

| ECM | LOC | SUMMARY OF MODIFICATIONS | EXECUTED | CHECKED | RELEASED | DATE | VER |
|---|---|---|---|---|---|---|---|
| 500001499515 | | ACCORDING TO CLAIM 415160683 | DRODRIGUEZ | JOSEARMANDO | JOSEARMANDO | 27.11.2018 | 04 |
| 500001499516 | | DOCUMENTO CERTIFICADO | ISAAVEDRA | JOSE9 | JOSE9 | 06.09.2018 | 03 |

| | | |
|---|---|---|
| EXECUTED | OLOPEZ | THREE PHASE W22 MOTOR - NEMA PREMIUM EFF |
| CHECKED | OMARG | FRAME 143/5TC IP55 TENV |
| RELEASED | OMARG | |
| REL DT | 03.11.2016 | WMX Huehuetoca Product Engineering |

10004588487
000 04
SHEET 1 /

1 HP 04 Poles 60Hz 414463338/0

A

UNCONTROLLED COPY

RELEASED

ZME A3

WEG's property. Forbidden reproduction without previous authorization.