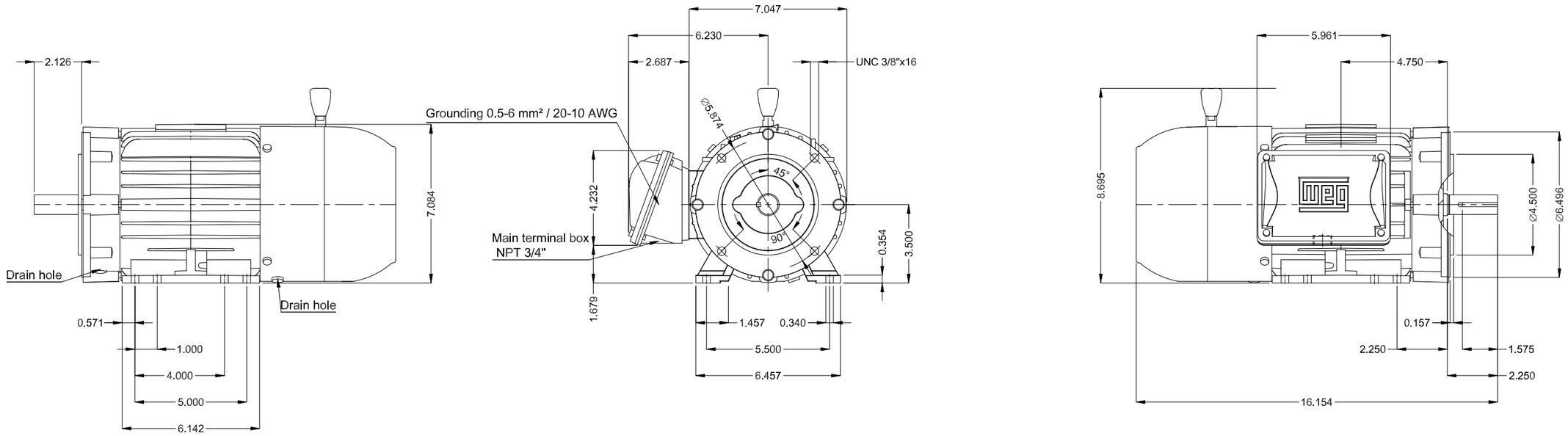

Brake voltage 525-575 V
With brake 10 (16 Nm)
Color RAL 5009
Painting plan 207A
Mounting NEMA F-1
Mounting B34D

DE Shaft End

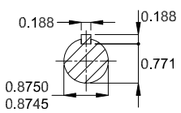

1.5 HP 04 Poles 60 Hz | A

Scale 1 : 5

ECM	LOC	SUMMARY OF MODIFICATIONS	EXECUTED	CHECKED	RELEASED	DATE	VER
			HYBRISUSER				00

EXECUTED	HYBRISUSER
CHECKED	
RELEASED	
REL. DATE	

THREE PH. MOTOR W22 BRAKE MOTOR NEMA PREM. EFF.
FRAME 143/5TC IP55 TEFC

PREVIEW

WDD 00

SHEET 1 / 1

Dimensions in inches

A3

WEG's property. Forbidden reproduction without previous authorization.